GROWspan™
greenhouse structures

BEGIN HERE:

- Main Frame
- End Frames
- Main Cover

*LOCATE MOST COMPONENTS FOR THE FRAMES AND CLADDING IN PACKAGES IDENTIFIED BY **GREEN LABELS OR MARKS**.

THE SE MODEL IS SHOWN THROUGHOUT THIS MANUAL. CONSULT THE QUICK START GUIDE NEAR THE BACK OF THIS MANUAL FOR DIAGRAMS SPECIFIC TO L & LE MODELS.

GrowSpan™ Series 750 Greenhouse 32' Wide with 7' Sidewalls & Internal Blackout System

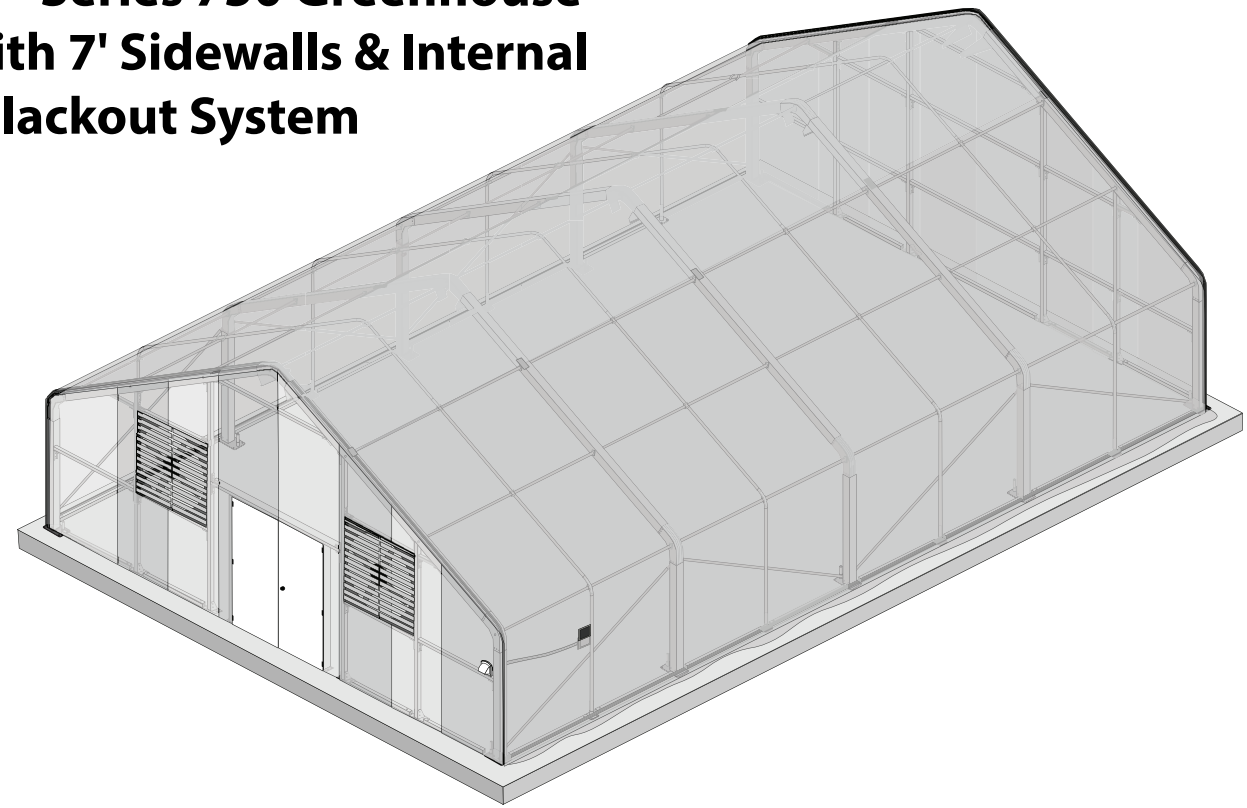

Diagram may show a building of a different design. SE MODEL IS SHOWN ABOVE.

WARNING: Cancer and Reproductive Toxicity - P65Warnings.ca.gov

32' Wide Series 750 Greenhouse:
All Standard Lengths.

Revision date: 04.25.23

General Information

READ THIS DOCUMENT BEFORE YOU BEGIN

The procedures within this guide describe how to assemble the main frame of the standard S750 greenhouse. ***Before you begin***, read and understand the documentation sent with your building. If you have any questions during the assembly, contact Customer Service at 1-800-245-9881 for assistance.

Technical diagrams include information specific to your building. Refer to the technical diagrams when instructed to do so to prevent mistakes and improper assembly.

ATTENTION: Individuals with limited construction experience should enlist the services of a qualified contractor familiar with local and regional building codes and the construction of similar greenhouse structures. Regardless of who completes the construction, ***some procedures must be completed before others***.

SAFETY PRECAUTIONS

- Wear eye and head protection.
- Wear gloves when handling building components.
- Use a portable GFCI (Ground Fault Circuit Interrupter) when working with electric power tools and cords.
- Use lifts and other power tools suitable to accomplish the procedures outlined in this document and in the detailed final drawings.
- Safety harnesses are required for all workers in elevated positions.

SAFETY AND ASSEMBLY NOTICE

THE ASSEMBLY OF THIS BUILDING MUST CONFORM TO ALL AUTHORITIES HAVING JURISDICTION IN THE REGION WHERE THE BUILDING ERECTION WILL OCCUR. THE BUILDING MANUFACTURER WILL NOT BE RESPONSIBLE FOR FAILURE TO COMPLY WITH ESTABLISHED BUILDING CODES AND RESTRICTIONS BY A CONTRACTOR SUPPLIED BY THE CUSTOMER. IN THOSE AREAS WHERE SUCH AUTHORITIES DO NOT EXIST, THE BUILDING ASSEMBLY MUST CONFORM TO THE REQUIREMENTS IDENTIFIED IN THIS DOCUMENT AND THE APPROVED BUILDING DRAWINGS.

ADDITIONALLY, THE BUILDING MANUFACTURER WILL NOT BE RESPONSIBLE FOR ANY DAMAGE OR INJURY DIRECTLY OR INDIRECTLY RESULTING FROM THE ERECTION OF THE BUILDING REGARDLESS OF THE EXISTENCE OF CODES AND RESTRICTIONS AND WHETHER THESE WERE FOLLOWED OR IGNORED.

FOUNDATION

GrowSpan is not responsible for the design, construction, or maintenance of the foundation unless specified in the original contract. Contact a professional and licensed contractor familiar with similar buildings regarding foundation requirements and foundation questions. ***Consult the Base Plate Layout diagram near the back of this guide for required dimensions.***

SPECIAL ASSEMBLY NOTE: BEFORE YOU BEGIN

MANY OF THE PROCEDURES DESCRIBED BELOW AND WITHIN THIS GUIDE CAN OCCUR SIMULTANEOUSLY. SOME, HOWEVER, MUST BE COMPLETED BEFORE MOVING ON TO THE NEXT PROCEDURE.

TO BETTER UNDERSTAND THE ENTIRE ASSEMBLY PROCESS AND TO PREVENT DAMAGE OR POSSIBLE INJURY, READ THROUGH THIS ENTIRE GUIDE ***BEFORE*** YOU BEGIN.

PRE-ASSEMBLY PROCEDURE

The following general series of steps will help plan the erection of the building:

1. Verify that all parts are included in the shipment. Notify Customer Service for questions or concerns.

   ATTENTION: Inspect the shipment for damage. Record any damage on the bill of lading before it is signed. If damage is found after opening a container, contact the carrier or carrier agent immediately. Contact your sales representative for additional information immediately when damage is discovered.
2. Unload shipment.
3. Read these instructions, the final drawings, and all additional documentation included with the shipment ***before*** you begin.
4. Gather the tools, bracing, lifts, ladders, and required personnel. See sample tool and equipment list.
5. Check the weather ***before*** you begin and plan accordingly.
6. Read the warranty information and complete the documentation as instructed.

ASSEMBLY NOTE: Install Tek screws using a clutched drill driver running approximately 750 RPM while applying approximately 50 lbs of force. **DO NOT USE AN IMPACT DRIVER!**

Shipping Color Codes and Additional Systems

SHIPPING COLOR CODES

Parts for a specific building component or system can be found in these color-coded packages or shipping containers:

- **GREEN:** Main greenhouse including roof film, end wall framing and cladding, and double door.
- **GREY:** Interior Blackout System including the knee wall for each side.
- **BLUE:** Hardware to attach customer-supplied wood baseboard, or components for the steel base tube (included).
- **PURPLE:** Exhaust Fans and Circulation Fans (LE/SE).
- **YELLOW:** 6" D x 4' H x 19' L Evaporative Cooling System (LE/SE).
- **BLACK:** Evaporative Cooling System frame (LE/SE).
- **RED:** Gable Wall Hinged Vent (LE/SE).

SYSTEMS AND ACCESSORIES

Review all technical drawings related to each accessory or system (if present) *before and during* assembly. Some details will show locations of smaller parts that must be installed at a specific time. Read the following and proceed as needed to complete the construction.

MAIN DOUBLE DOOR — INCLUDED (ALL MODELS — GREEN)

Depending on location, weather conditions, door design, and personal preference, install the door once the end wall cladding is installed. Consider required access, pedestrian traffic, equipment and lift size, and desired level of security when deciding when to install the main door.

BLACKOUT SYSTEM — INCLUDED (ALL MODELS — GREY)

Consult the instructions for the blackout system before you begin. For easier installation of some blackout system components, install these before pulling the main cover film.

EXHAUST FANS — INCLUDED WITH LE & SE MODELS (PURPLE)

Review the instructions included with these items to install. The rough openings should be present in the end walls if earlier suggestions were followed. In some instances, the purchase of additional framing may be necessary to complete the installation of some components.

EVAPORATIVE COOLING SYSTEM — LE & SE MODELS ONLY (YELLOW)

For this greenhouse, install the **4' H x 19' L** evaporative cooling system with 6" pads in the end wall opposite the exhaust fans. This system requires a water source and works in conjunction with the wall vent. Review the instructions for the end wall vent and evaporative cooling system to install these components in the end wall opposite the end wall with the door and exhaust fans.

END WALL VENT — INCLUDED WITH LE & SE MODELS (RED)

As noted, the end wall vent is opposite the exhaust fans and on the same wall as the evaporative cooling system. Consult the main building drawing and vent installation guide to assemble and install the vent.

ATTENTION: It is best to review all instructions sent with accessories *before* any construction begins. Doing so helps prevent the need to disassemble or modify frame components.

CIRCULATION FANS — INCLUDED WITH LE & SE MODELS (PURPLE)

Circulation fans attach to the blackout system support rafters inside the greenhouse using the supplied QH1330 brackets, 2" x 2" square tubing, and 5/16" locknuts and bolts. Depending on personal preferences, additional customer-supplied materials may be required to mount the fans in the desired positions. Consult the documents included with the fan for additional installation details.

ADDITIONAL PURCHASE REQUIRED

Items below ***are not included*** with a standard S750 greenhouse and require additional purchase. Contact your sales representative for details if you have questions about your building and building order.

LIGHTS & HEATERS

Install these items and related wiring anytime *after* the blackout system is assembled and installed. Individual preferences, growing requirements, climate, and other factors, all affect the placement of these and similar components. *Consult the services of an electrician and greenhouse specialist to determine how best to position and install these and similar accessories.*

ATTENTION: ALL ELECTRICAL AND GAS SUPPLY CONNECTIONS TO BE COMPLETED BY A PROFESSIONAL, LICENSED AND QUALIFIED CONTRACTOR ACCORDING TO LOCAL AND REGIONAL BUILDING CODES AS THESE APPLY.

Required Tools & Equipment

REQUIRED TOOLS

The following list identifies the basic equipment and some main tools needed to assemble the greenhouse. *The size of the required personnel lifts may vary as will the equipment needed to unload and move building components. Additional hand tools and supports may be needed depending on the structure size, location, and existing restrictions and codes.*

- Tape measure or measuring device.
- Clutched cordless drill driver & drill bit set that includes: 1/8", 3/16", 1/4", 3/8", and 7/16" bits for metal; additional sizes may be needed.
- Corded and cordless impact wrenches for bolt connections and anchor bolts.
- Impact socket set that includes 15/16" for the 5/8" anchor bolts.
- Wrench set — up to 1” (covers most cases).
- Utility knife and blades to cut film and blackout material.
- Hammers, pry bars, & alignment bars for bolt installation.
- Generator or power source & extension cords.
- Cordless reciprocating saw (Sawzall®) & metal-cutting blades. Also, power saw equipped to cut angles at the end of some metal, end frame tubes.
- Plastic or other material to place under roof and end wall cladding to keep it clean during set up and installation.
- Hand files (round and flat) to remove metal burrs from metal after cutting.
- Hammer drill (for anchor bolt installation). May not apply to all applications.
- Levels and plumb bob, or similar tool to plumb and square end rafters and level related frame members.
- Miscellaneous clamps, ratchets, and straps.
- Safety equipment to protect head, eyes, hands and feet. Safety straps and harness for working in lifts.

EQUIPMENT

- Aerial Lifts: Reach determined by height of foundation (if applicable) plus peak height of building. Add about 5’ extra.
- Telescopic Handlers (telehandler) for square rafter assembly and installation.
- Ladders, work platforms, and other machinery for lifting designed to work safely at building height.

CUSTOMER-SUPPLIED PARTS AND MATERIALS

- Silicone sealant: Some sealant is included. Additional may be needed depending on application.
- Epoxy to secure anchor bolts to concrete (depends on local building codes).
- Materials to seal end wall and sidewall areas at ground level.
- Materials to supply power to electrical exhaust fans, evaporative cooling system water pump, and blackout system drive motor.
- Miscellaneous items for custom components and installation of those items.
- Straps and ratchets or similar items to square and plumb columns, rafters, and mid trusses during frame installation.
- Baseboard Lumber **(L & LE Models only)**: 2" x 8" x 144" boards (minimum).
- Controller for greenhouse and blackout systems. *Contact your sales representative for additional details.*

BASIC ASSEMBLY STEPS

The steps that follow describe the typical sequence to ensure proper greenhouse assembly. When present, local restrictions and building codes may require additional steps. Failure to follow these steps or adhere to recognized codes and standards or both may result in an improperly assembled building system and *will void the warranty and all protection the building owner is entitled to*. These are the basic assembly steps:

1. Verify that foundation dimensions are compatible with building dimensions, and that the foundation is square and level.
2. Layout base plate positions (including those for end wall frame), mark anchor bolt locations, and install anchor bolts.
3. Loosely set square-tube rafter base plates and round rafter base plates.
4. Assemble square and round rafters and set in place to assemble main frame.
5. Cut and set end wall columns. Assemble end wall frames, door jambs, and header. Consult main building drawings for details.
6. Install end wall polycarbonate panels and double door.
7. Install roof film.
8. Install evaporative cooling system, end wall vent, and fans (if equipped).
9. Install blackout system and test.

PARTS IDENTIFICATION

The following graphics will help identify parts. Additional parts are identified in the technical drawings for the building. Some parts are not shown.

GREEN

FA4482B
Tek Screw

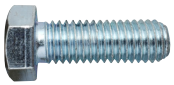

FAG355
3/8" x 1" Bolt

FAG357
3/8" x 1 1/2" Bolt

FAW555
5/8" x 4 1/2"
Wedge Anchor

117175 & 117176
Cross Connector

116359S02 &
116359S03
Purlin Pipe
Connector

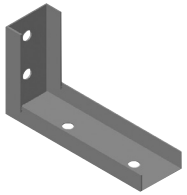

Angle Bracket
QH1330

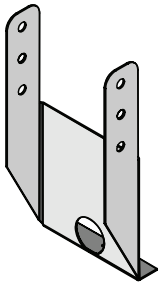

116994S02 Inner
Rafter Support (Mid)

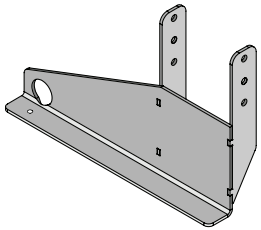

116996S02 Inner
Rafter Support
(End – RH)

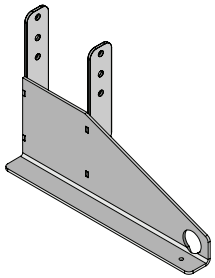

116997S02 Inner
Rafter Support
(End – LH)

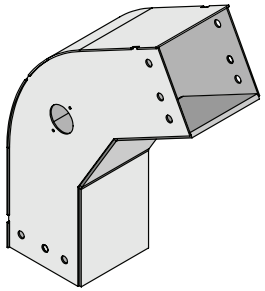

116351A02
Side Joint Assembly

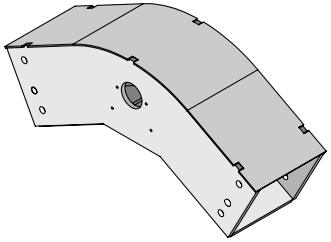

116352A02
Peak Joint Assembly

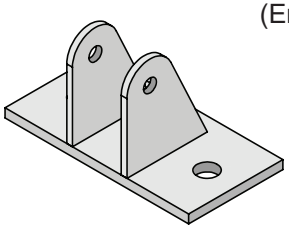

115251S02 Base
Plate

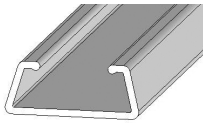

102197Z144 Aluminum
U-Channel

102198A
Poly Spring Wire

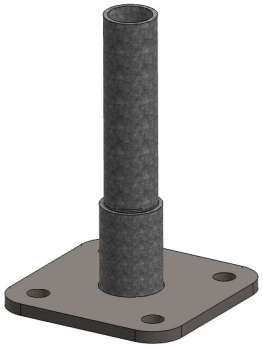

117169 Mid Rafter
Base Plate
&
116360A Blackout
System End Support
Rafter Base Plate

116358A02
Main Rafter
Base Plate

Frame Overview

GREEN

OVERVIEW

This section describes frame assembly. See illustration below to identify main parts.

1. Prepare site and attach base plates to concrete slab, perimeter footings, or piers.
2. Locate required parts for each assembly procedure.
3. Proceed as instructed.

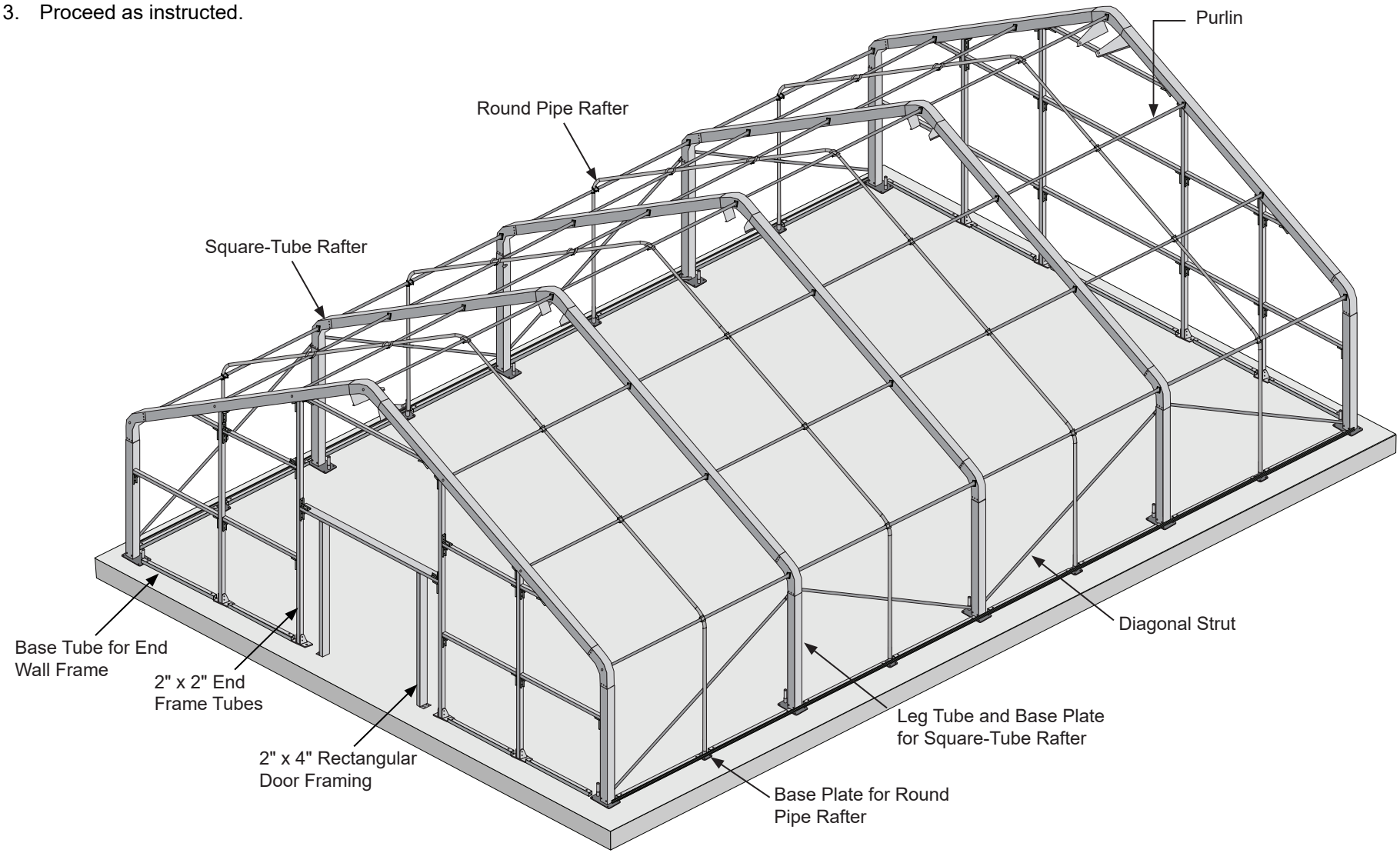

Drawing may show a model of a different length. Refer to Quick Start section located near the back of this guide for on-center measurements and post layout.

BUILDING SITE

WARNING: Unless otherwise stated, a concrete foundation is recommended to support the building. Failing to secure base plates to concrete (or approved helical anchors) may result in personal injury, and damage to building, building contents, and surrounding property.

LOCATION

Choosing the proper location is an important step before you begin. The following suggestions and precautions will help determine whether your selected location is the best location.

- Never erect structure under power lines.
- Identify whether underground cables and pipes are present *before* preparing site or anchoring structure.
- Location should be away from structures that could cause snow to drift on or around building.
- Do not position greenhouse where large loads such as snow and ice, large tree branches, or other overhead obstacles could fall.

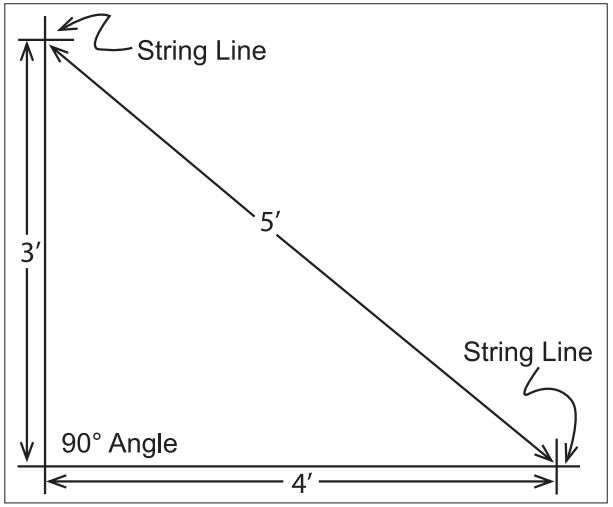

BUILDING SITE PREPARATION

- Consult the services of a qualified contract to properly prepare the building site and layout the base plate positions.
- A level site is required to accurately and safely construct the building.
- Use a transit to ensure an accurate 90° angle when marking base plate, or the 3-4-5 rule can be used. Refer to diagram to the right. Using multiples of 3-4-5 such as 6-8-10 or 12-16-20 helps to maintain an accurate 90° angle.
- Review all layout and end frame diagrams for dimension details.
- ***Consult and follow local and regional building codes for concrete slab (and pier) requirements.***
- Site should slope away from building for proper drainage.
- Site is square when distances measured diagonally (corner-to-corner) from the same point at each corner are equal.




SLAB FOUNDATION RECOMMENDATION

It is recommended when preparing the concrete foundation that the **minimum outside** dimension be 4" longer and wider than the greenhouse out-to-out dimensions from each side of the baseplate.

Refer to Quick Start - Side Profile and Base Plate Layout sections located near the back of this guide for further details.

FOUNDATION RECOMMENDATIONS		
BUILDING WIDTH	**OUT-OUT BASEPLATE SPACING**	**MINIMUM OUT-OUT FOUNDATION SPACING**
32'	32'-6"	33'-2"

FOUNDATION RECOMMENDATIONS		
BUILDING LENGTH	**OUT-OUT BASEPLATE SPACING**	**MINIMUM OUT-OUT FOUNDATION SPACING**
48'	48'-10"	49'-6"
72'	72'-10"	73'-6"
96'	96'-10"	97'-6"
120'	120'-10"	121'-6"

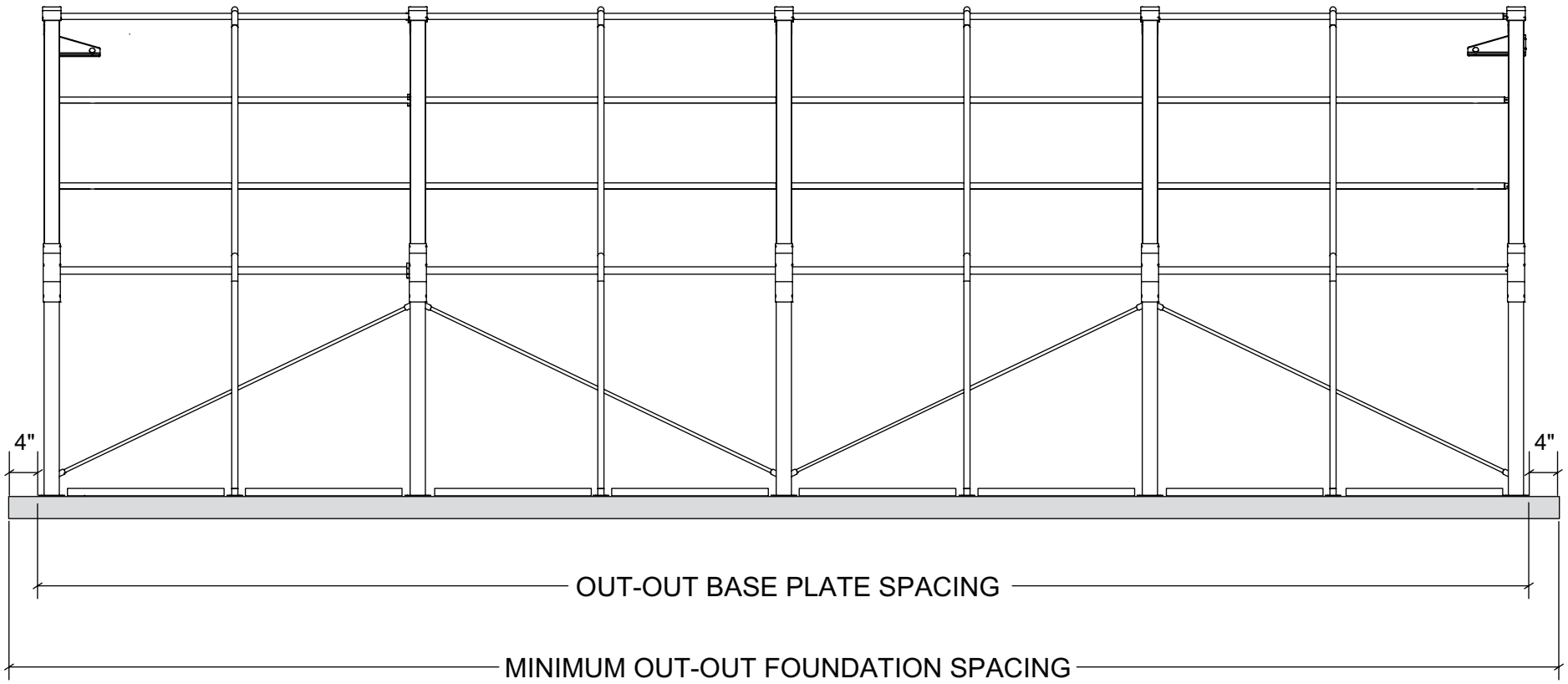

SLAB FOUNDATION RECOMMENDATION

Diagram shows sample base plate layout in reference with slab foundation.

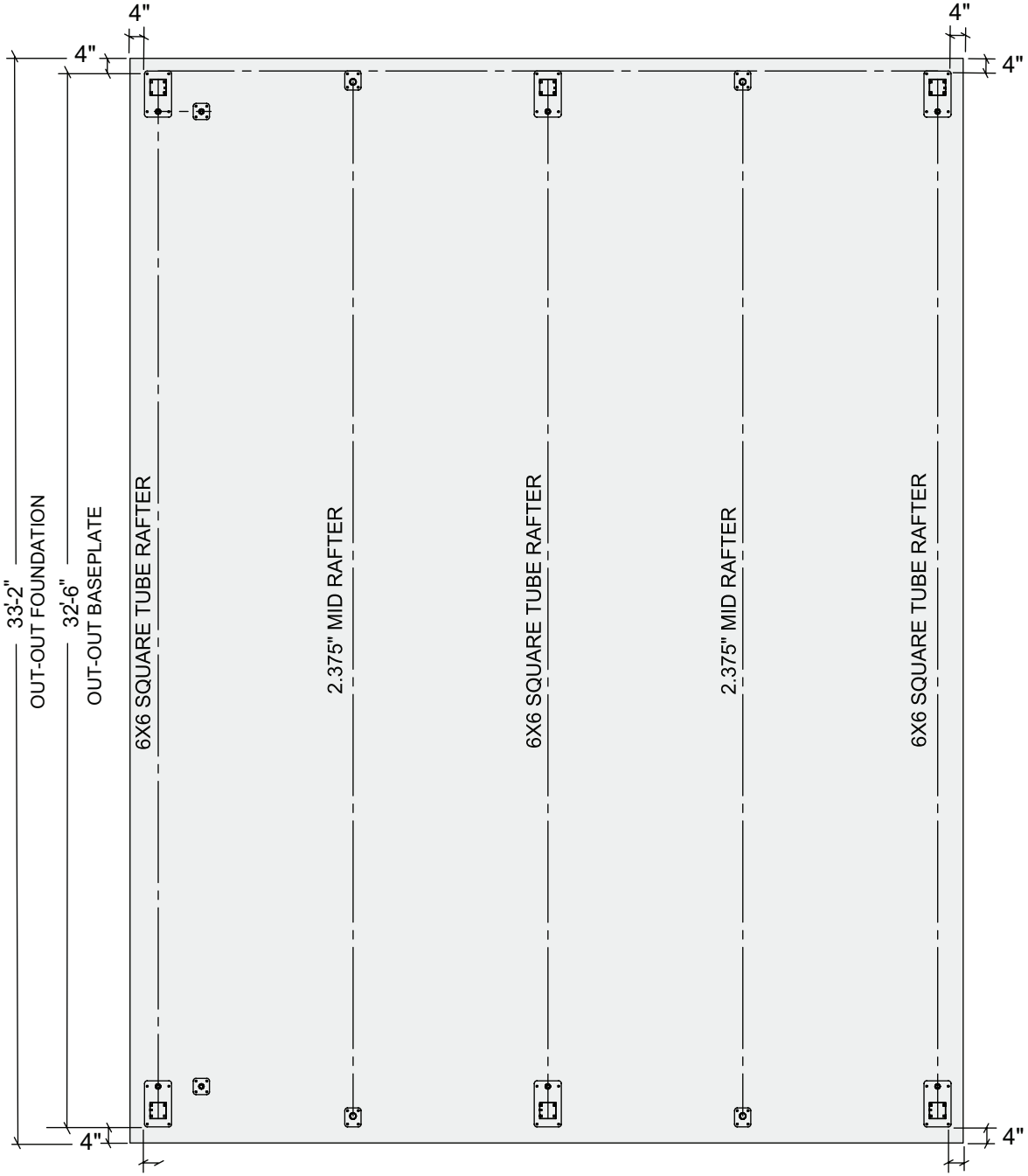

Anchor Base Plates

The following steps describe installing the greenhouse on a concrete slab. If you are securing base plates to concrete piers or helical anchors, enlist the services of a qualified and experienced contractor familiar with the construction of similar buildings. Consult the diagrams in the Quick Start section for proper spacing.

Once concrete has cured, install the anchor bolts and attach the base plate and lower tube assemblies for the square-tube rafters. Use the layout below. Ensure base plates are aligned and spaced according to Quick Start diagrams. ***Do not fully tighten the anchor bolts for the square rafter base plates until after installing the assembled upper rafter section.***

ATTENTION: The base plates for the square-tube rafters must be squarely mounted for proper installation of the upper square rafter assemblies. Consult a qualified construction contractor familiar with anchor bolt requirements and installation if needed.

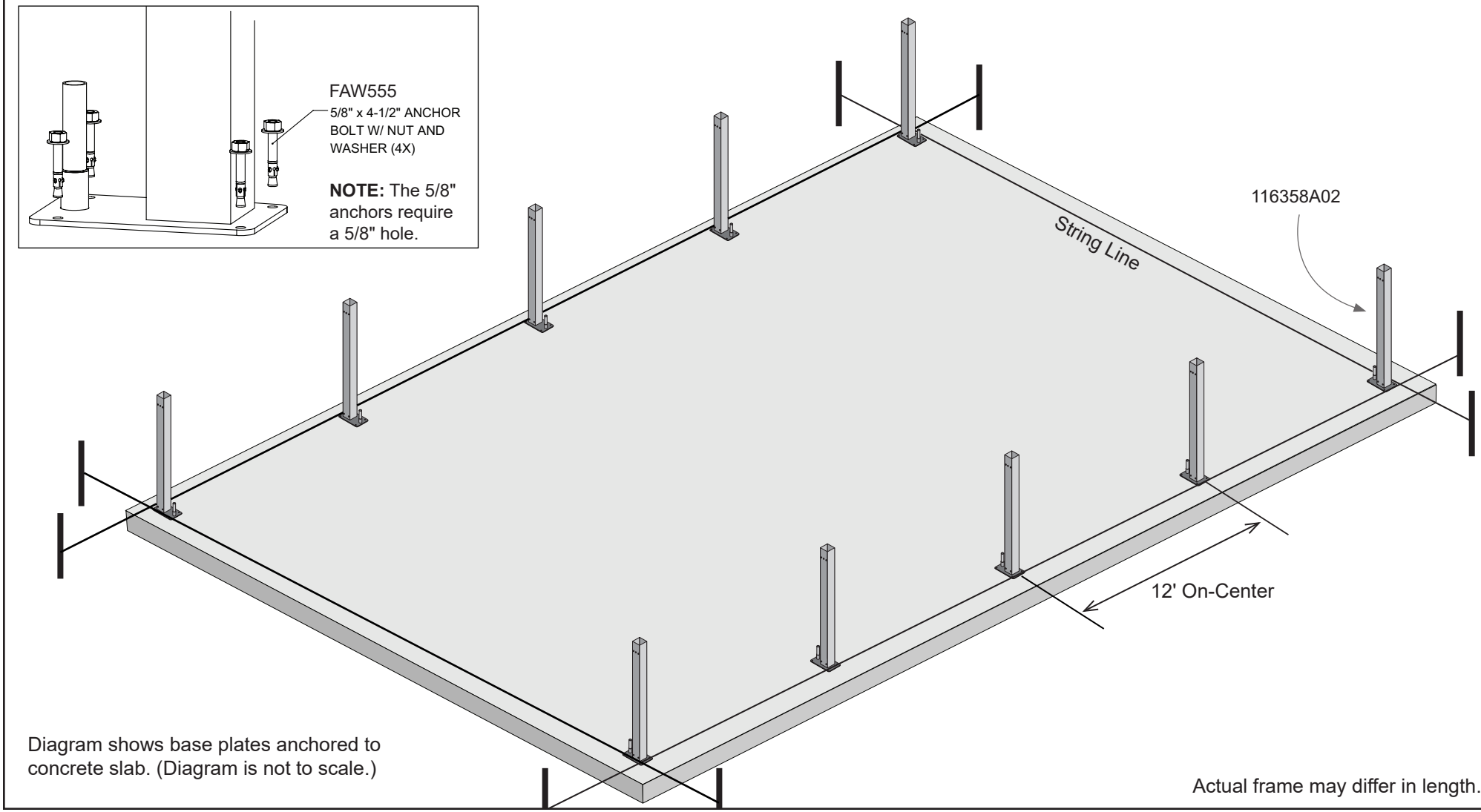

Diagram shows base plates anchored to concrete slab. (Diagram is not to scale.)

Actual frame may differ in length.

General Anchor Bolt Installation:

1. Determine on-center position of square rafter base plates. ***See layout in Quick Start section.***
2. Mark base plate center and mark the on-center positions of plates on foundation.
3. Square plates on foundation using a string line or similar method. Align marks of plates with layout marks and mark bolt hole locations using base as a template.
4. Drill mounting holes *according to requirements of anchor bolts*. ***The 5/8" wedge anchors require a 5/8" drilled hole in the concrete.***
5. Clean bolt holes according to anchor bolt specifications and directions on epoxy container (if used). ***WEAR EYE PROTECTION AND DUST SHIELD OR MASK!***
6. Set plate back in place over holes. Take the anchor bolts (with nuts and washers installed) and carefully drive one into each bolt hole. Adjust nut to end of bolt threads to prevent damage to threads when driving into place.
7. Repeat procedure to install remaining base plates.
8. Return to all anchor bolts and twist nuts down a few turns to keep the assemblies from tipping during the installation of the upper square rafter sections.

   ATTENTION: DO NOT FULLY TIGHTEN AT THIS TIME. LEG ASSEMBLIES MUST REMAIN LOOSE DURING THE SETTING OF THE UPPER RAFTER ASSEMBLY.
9. Continue with the next procedure.

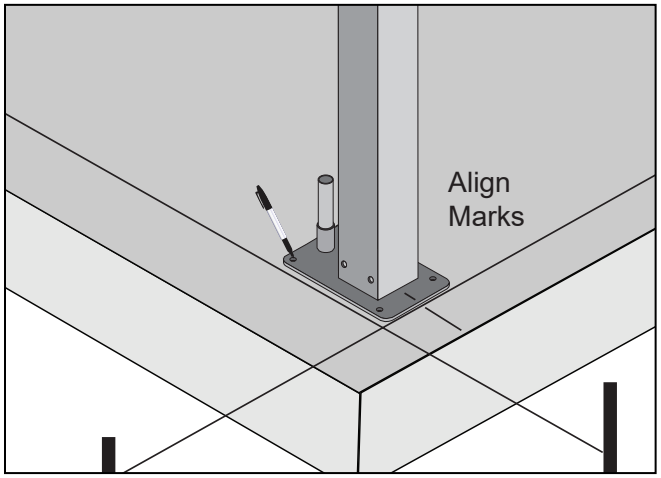

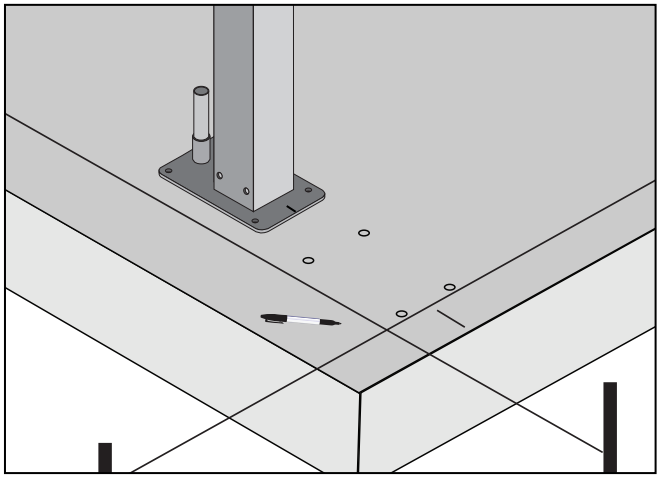

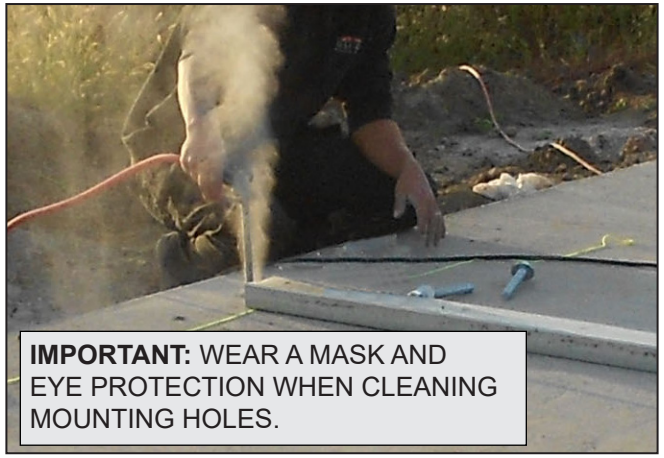

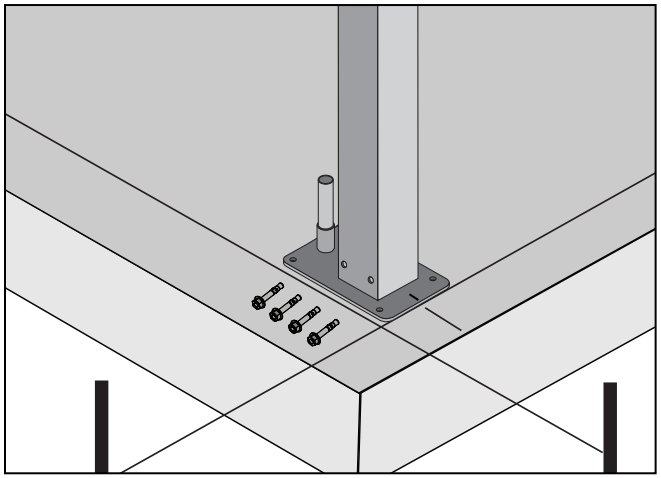

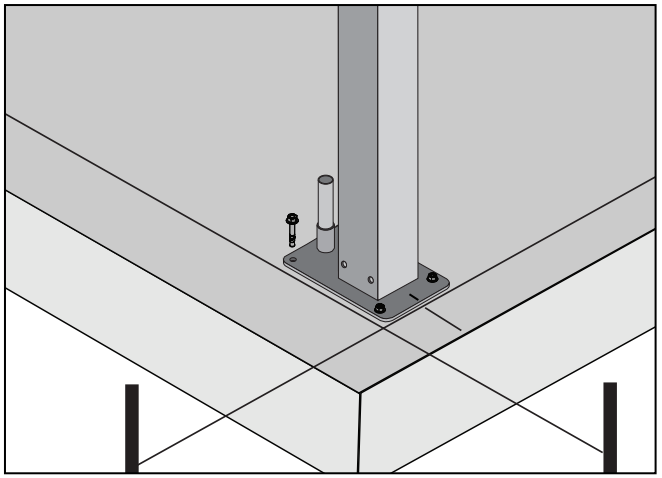

Base Plates for Round-Style Mid & Blackout System Support Rafters

Complete these steps to attach the 117169 base plates for the round-style mid rafters and the 116360A base plates for the blackout system end support rafters:

1. To align and attach the 117169 base plates for the ***round-style mid-rafters***, repeat the procedure on the previous page.
2. Ensure base plates are aligned and spaced according to the layout diagram in the Quick Start section.
3. Tighten all anchor bolts using a 15/16" wrench or socket for these base plates once installed.
4. Install the four (4) 116360A base plates for the ***blackout system end support rafters*** at each frame corner. See call-out below.
5. Continue with the next procedure.

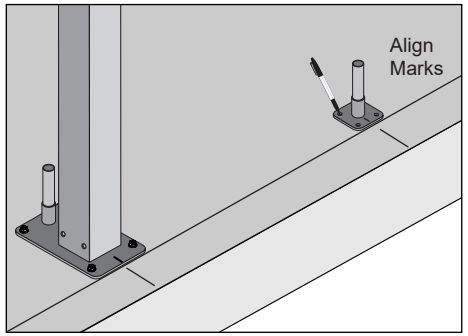

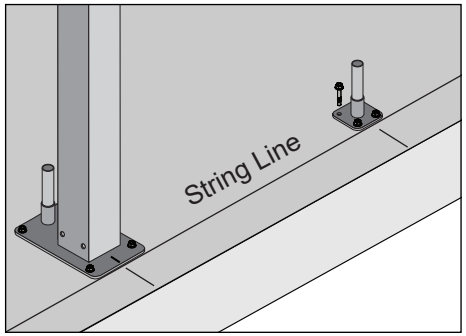

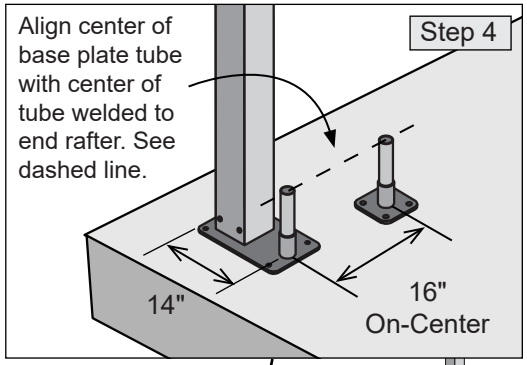

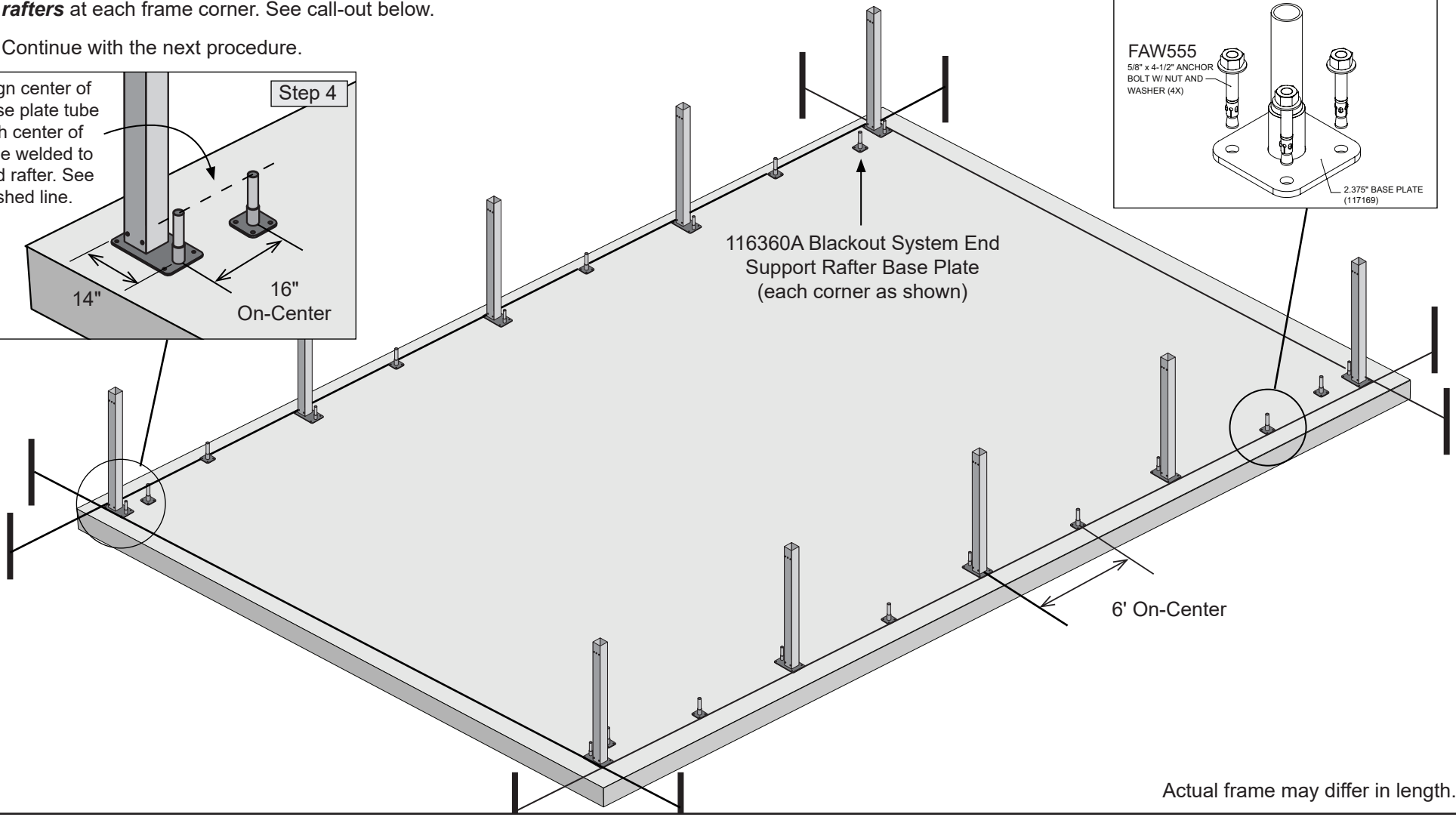

Actual frame may differ in length.

Rafter Assembly Overview

GREEN

There are three (3) rafter styles for a standard S750 greenhouse:

- **Style A Rafters (square-tube rafter – end)** positioned at each frame end.
- **Style B Rafters (square-tube rafter – mid)** spaced at 12' on-center between **Style A** rafters.
- **Style C Rafters (round-pipe mid rafter)** spaced at 6' on-center between main square-tube rafters.

Diagram shows a typical frame and the different rafter positions. Actual frame may differ in length. Consult the Side Profile diagram in the Quick Start section for your building length before constructing the rafters and frame.

ATTENTION: ASSEMBLE FRAME IN 24' SECTIONS TO ALLOW FOR INSTALLATION OF 24' PURLIN PIPES *IN ALL PURLIN LOCATIONS*.

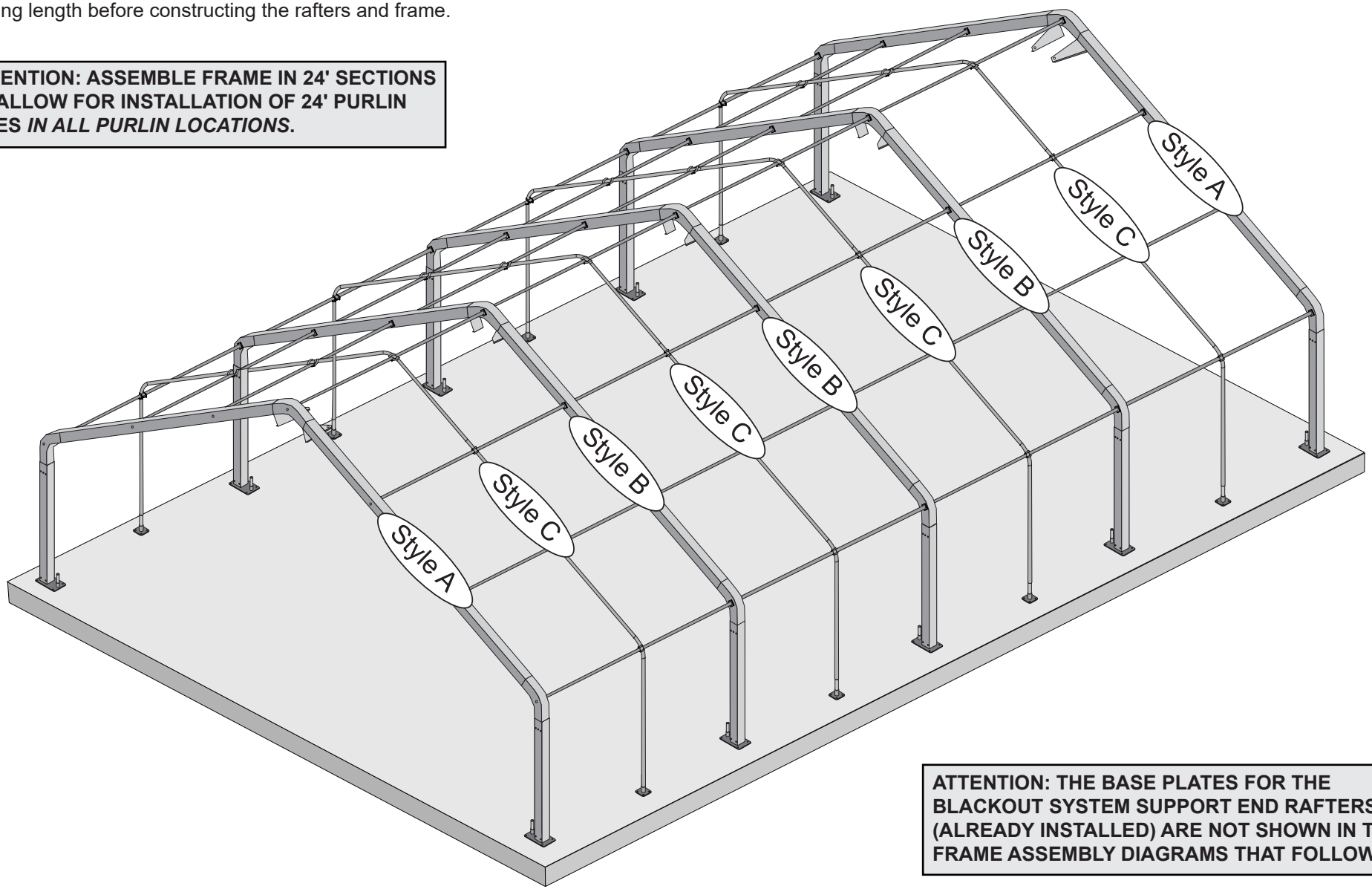

ATTENTION: THE BASE PLATES FOR THE BLACKOUT SYSTEM SUPPORT END RAFTERS (ALREADY INSTALLED) ARE NOT SHOWN IN THE FRAME ASSEMBLY DIAGRAMS THAT FOLLOW.

1

ASSEMBLE SQUARE-TUBE RAFTERS (STYLES A & B)

After anchoring base plates to concrete, continue with main rafter assembly. ***Lifts and assistants are required to move and set rafters during frame assembly.***

NOTE: Assemble all main rafters (when possible) and continue with the frame assembly as described.

1. Lay out main rafter components on the ground to stage for rafter assembly. Examples shown include components of both the end square-tube rafters (A) and mid square-tube rafters (B). Additional rafter assembly details are found in Quick Start section. Each rafter consists of two (2) side joint assemblies, two (2) rafter tubes, and one (1) peak joint assembly.

   ATTENTION: Peak support brackets differ between Style A & Style B rafters. See diagrams on previous page and in the Quick Start section.

2. Insert rafter tubes into the open ends of the peak joint assemblies. Align the pre-drilled holes of the assemblies with the rivet-nut holes of the rafter tube.

3. Secure using 3/8" hex bolts as noted. Use **FAG357 (3/8" x 1-1/2") bolts** for the peak connections; use **FAG355B (3/8" x 1") bolts** for the side joint connections.

   Tighten until snug. ***DO NOT OVERTIGHTEN! Use a wrench or ratchet and socket. DO NOT USE AN IMPACT WRENCH. DAMAGE TO RIVET NUTS MAY OCCUR.***

4. Set assembled rafters aside and continue with the next section.

   ATTENTION: In cases where space is limited, it may be necessary to begin frame assembly.

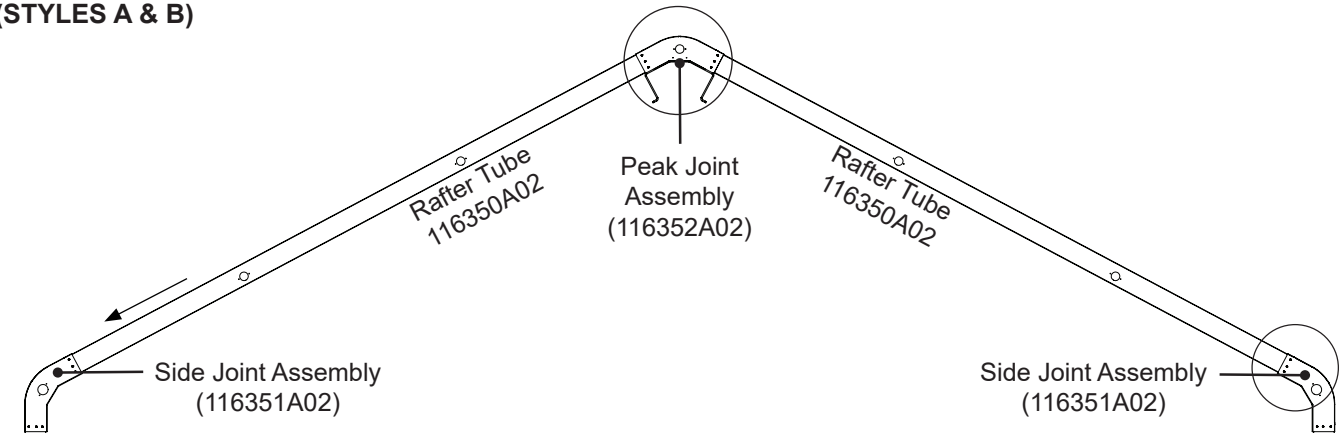

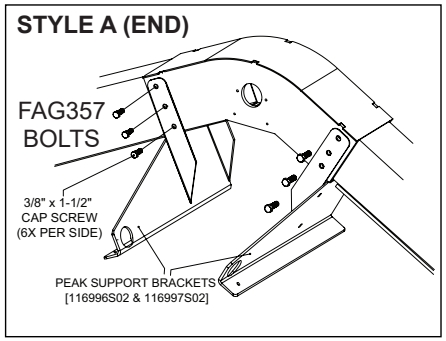

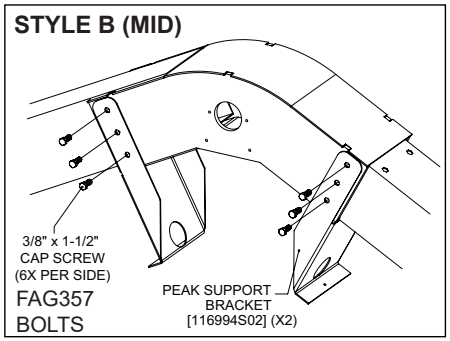

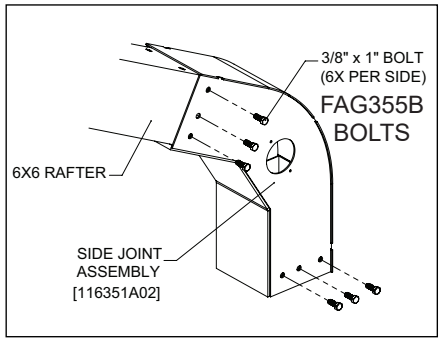

2

ASSEMBLE MID RAFTERS (C)

GREEN

Style C (round-pipe mid) rafters are positioned between each square-tube main rafter and are secured to the 117169 base plates installed earlier. Round-pipe mid rafter assemblies consist of three main rafter sections. Complete these steps:

1. Locate components shown in the detail (right) and construct each round-pipe mid rafter.
2. Secure each rafter segment splice using FA4482B Tek screws. Consult diagrams in Quick Start section and at the right for component identification and connection details. *Install screws in a location that will not contact the film cover when installed.*
3. Wrap splice and screws with duct tape to protect cover.
4. Set rafters aside when complete.

   ATTENTION: In cases where space is limited, it may be necessary to begin frame assembly.

5. Continue with the next section.

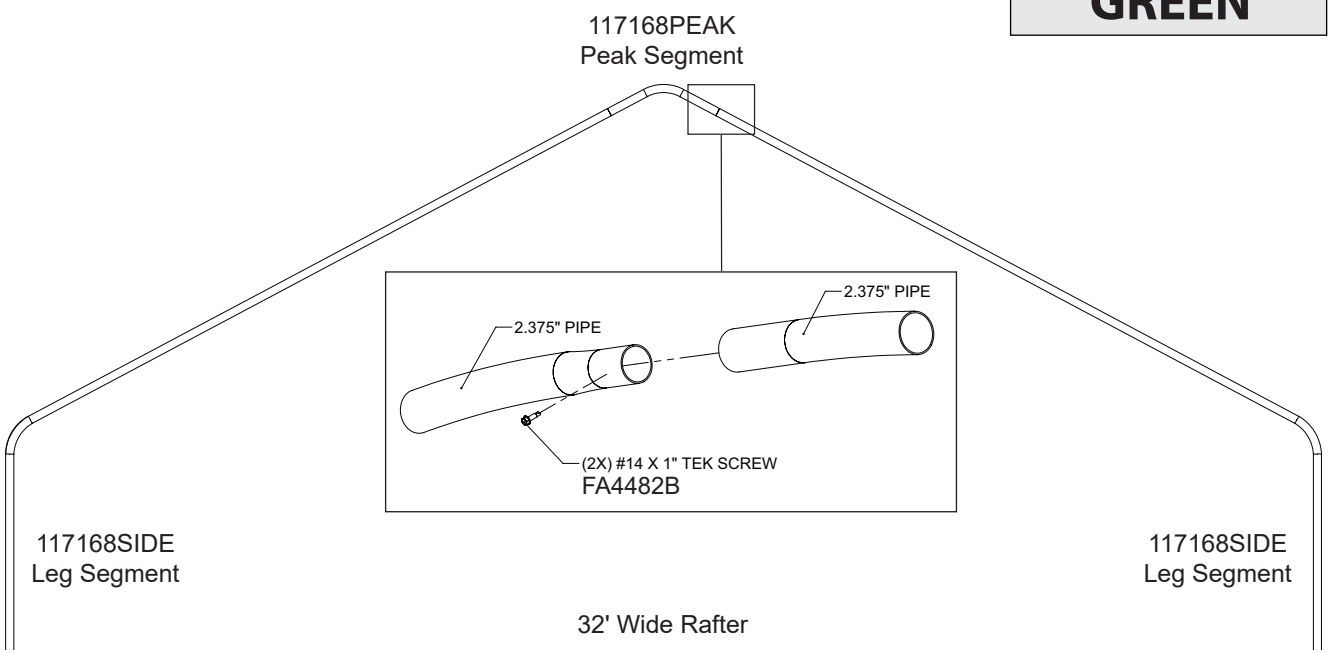

STEP 1: Connect rafter pipes. *Actual rafter pipe and connection may differ.*

STEP 2: Secure each rafter joint using two (2) FA4482B Tek screws.

STEP 3: Wrap each splice and Tek screws with 115198 duct tape to protect the film cover.

3 FRAME ASSEMBLY

Lifts and assistants are required. Seek the help of a qualified contractor if you are not familiar with the assembly of similar structures.

ATTENTION: ASSEMBLE FRAME IN 24' SECTIONS TO INSTALL 24' PURLIN PIPES *IN ALL PURLIN LOCATIONS*. SEE DIAGRAMS IN THIS SECTION.

Complete these steps:

1. With assistance and a lift, carefully lift the first square-tube rafter **(Style A)** and attach it to the base plate and leg assemblies at one end of the frame layout. ***TIGHTEN 3/8" BOLTS.***

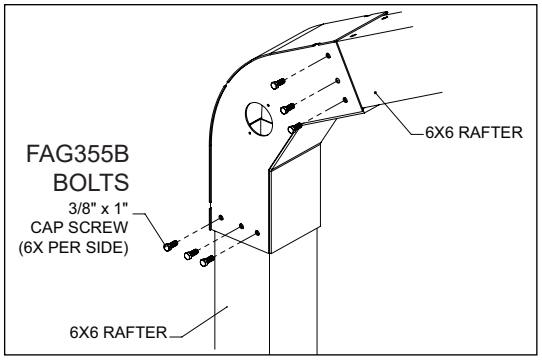

ATTENTION: Ensure that the 116996S02 and 116997S02 brackets at the peak are positioned toward the inside of the frame.

2. Steady the truss as shown using weights or ground anchors and cable or straps.

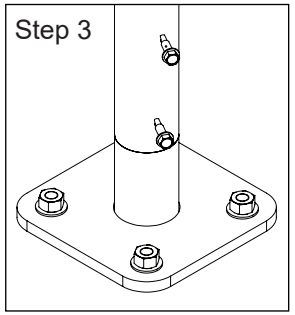

3. Set the next rafter **(Style C)** in place and secure it to

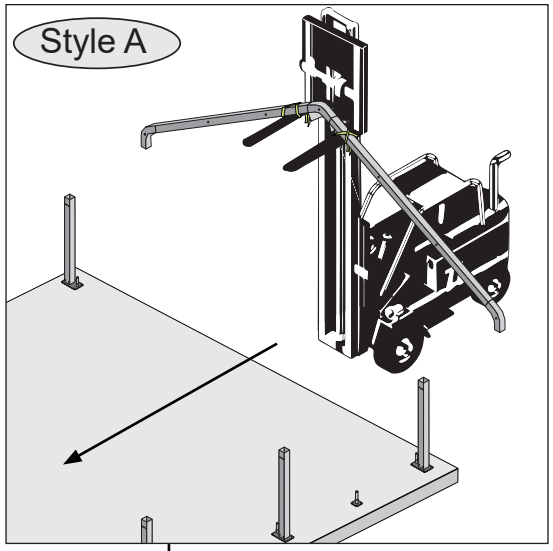

ATTENTION: ***TIGHTEN USING A WRENCH OR RATCHET AND SOCKET.***

CAUTION: Do not lift rafter at the peak using a single strap! ***Lift rafters using straps tied to separate lift points.***

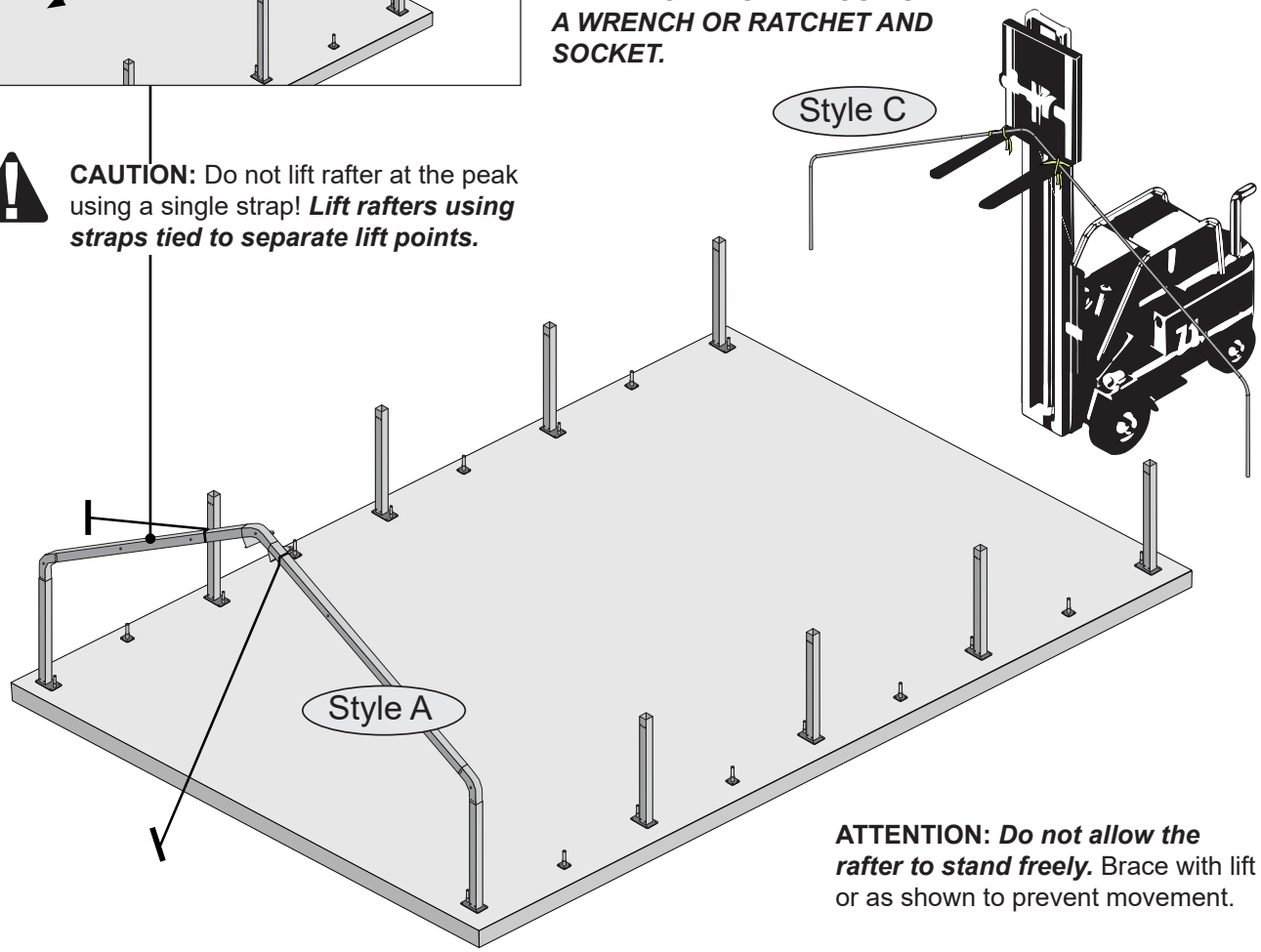

ATTENTION: ***Do not allow the rafter to stand freely.*** Brace with lift or as shown to prevent movement.

3

FRAME ASSEMBLY – continued

4. Select a **Style B** rafter and set in place as previously described. After connecting it to the base plate and leg assemblies, brace or use the lift to hold it in place. TIGHTEN BOLTS.

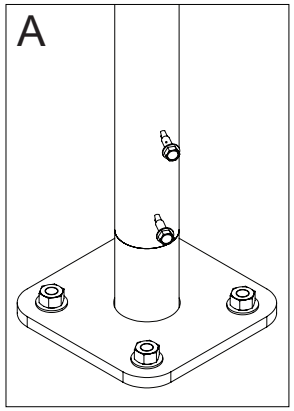

Secure rafter to base plate using FA4482B Tek screws.

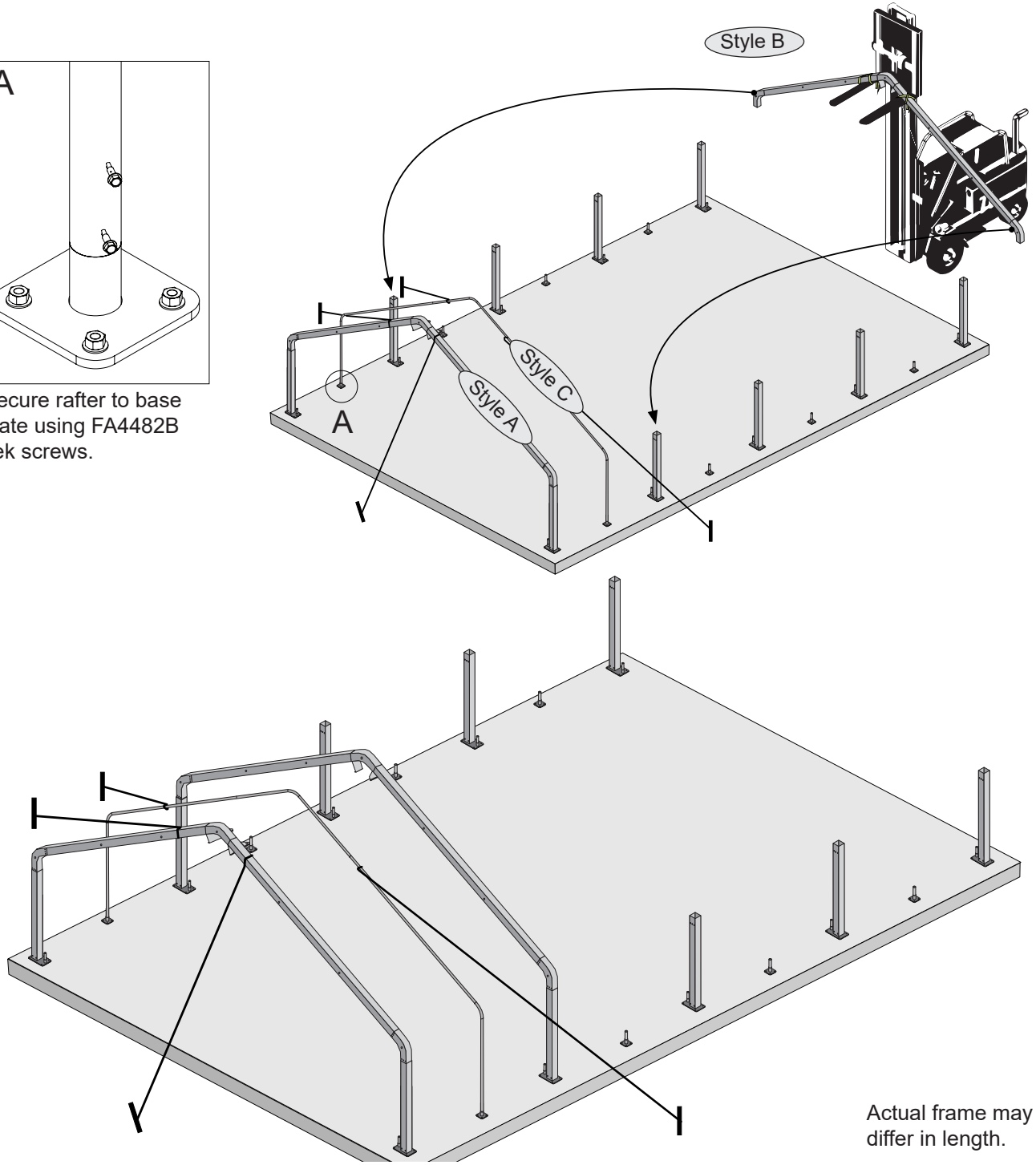

Actual frame may differ in length.

3

FRAME ASSEMBLY – continued

5. Review the side profile diagram for your building and locate the purlin pipes for this first section of the frame. Begin with the **2875S291G14** pipes. Pipe is 24' 3" long.
6. Slide two (2) pipes — swaged end first — into place at the top of each sidewall as shown. Add a flag or marker to the end of each pipe to prevent injury!

   IMPORTANT: During installation of the purlin pipes at corners, ***install a 116359S03 purlin pipe connector on each side of the square-tube Style B rafters and the inside of all Style A end rafters.***

PURLIN PIPE CONNECTORS *CANNOT* BE INSTALLED AFTER PURLINS ARE INSTALLED.

INSTALL ALL 116359S03 CONNECTORS DURING THE INSTALLATION OF CORNER PURLIN PIPES.

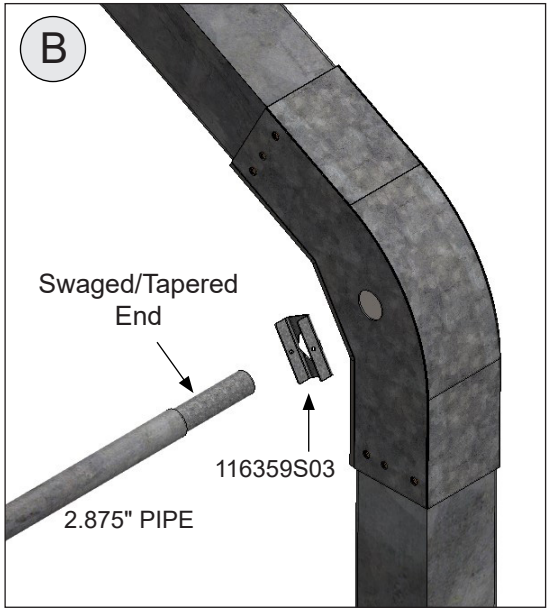

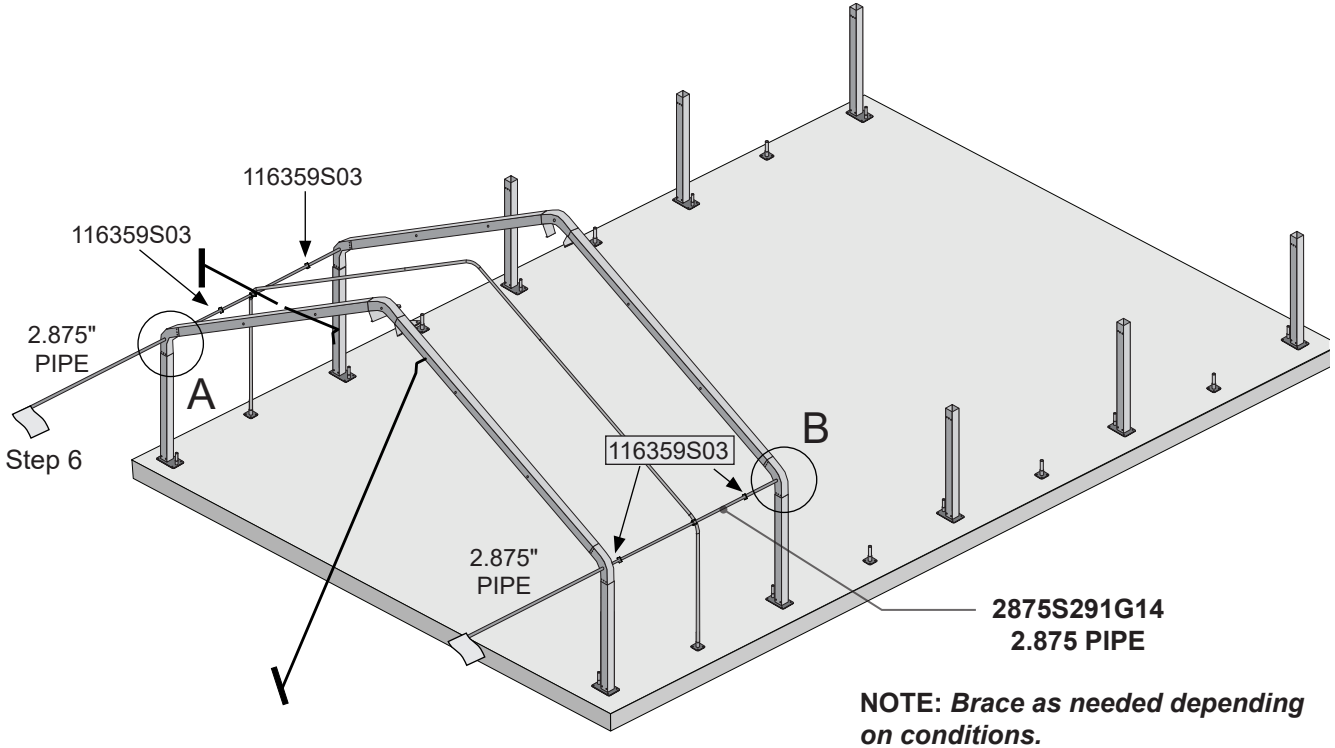

NOTE: ***Brace as needed depending on conditions.***

3

FRAME ASSEMBLY – continued

ATTENTION: ASSEMBLE FRAME IN 24' SECTIONS TO ALLOW FOR INSTALLATION OF 24' PURLIN PIPES *IN ALL PURLIN LOCATIONS*.

7. Repeat the previous steps as needed to set the next two rafters (Style C and Style B).
8. With those rafters in place and steadied, continue sliding the two purlin pipes into position at each corner.

   ATTENTION: Verify you have added all purlin pipe connectors before sliding the pipe into the Style B rafter installed in Step 7.

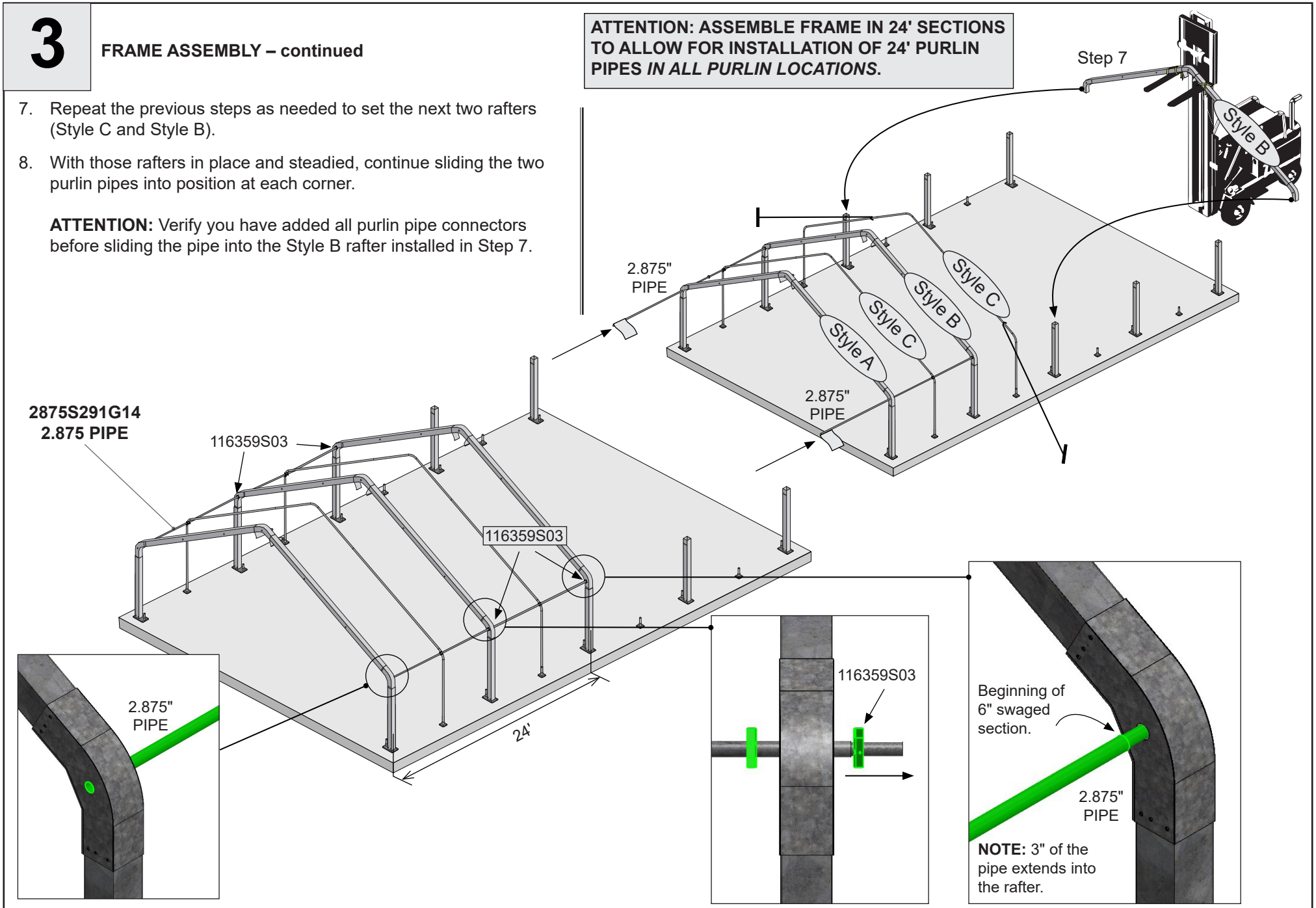

3

FRAME ASSEMBLY – continued

9. Locate the first pipe sections for the upper purlins **(2375S289G14)** and install those pipes. Remember to install the purlin pipe connectors as described.

   NOTE: *Upper purlin pipes are smaller in diameter than corner purlin pipes.* Except for the two end rafters, there is a purlin pipe connector on each side of the square-tube rafters.

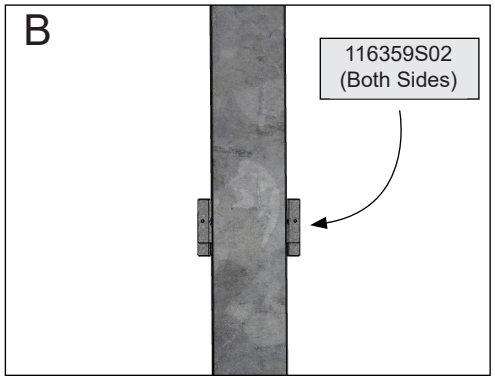

10. Return to the base plates of the first square-tube rafters and tighten the anchor bolts.

    ATTENTION: Take the necessary steps to plumb and square the end rafter ***before you tighten the anchor bolts***.

11. Return to the round Style C rafters and install a **117175** *cross connector* at each purlin.

12. Move to the top of the sidewall *on each side* and confirm the 6' on-center (oc) rafter spacing. Tighten the cross connector at each bend to lock the round rafter in place.

13. Move to the peak position, set the on-center rafter spacing, and tighten that cross connector.

14. Repeat the steps to install the cross connectors for the next round pipe rafter (Style C).

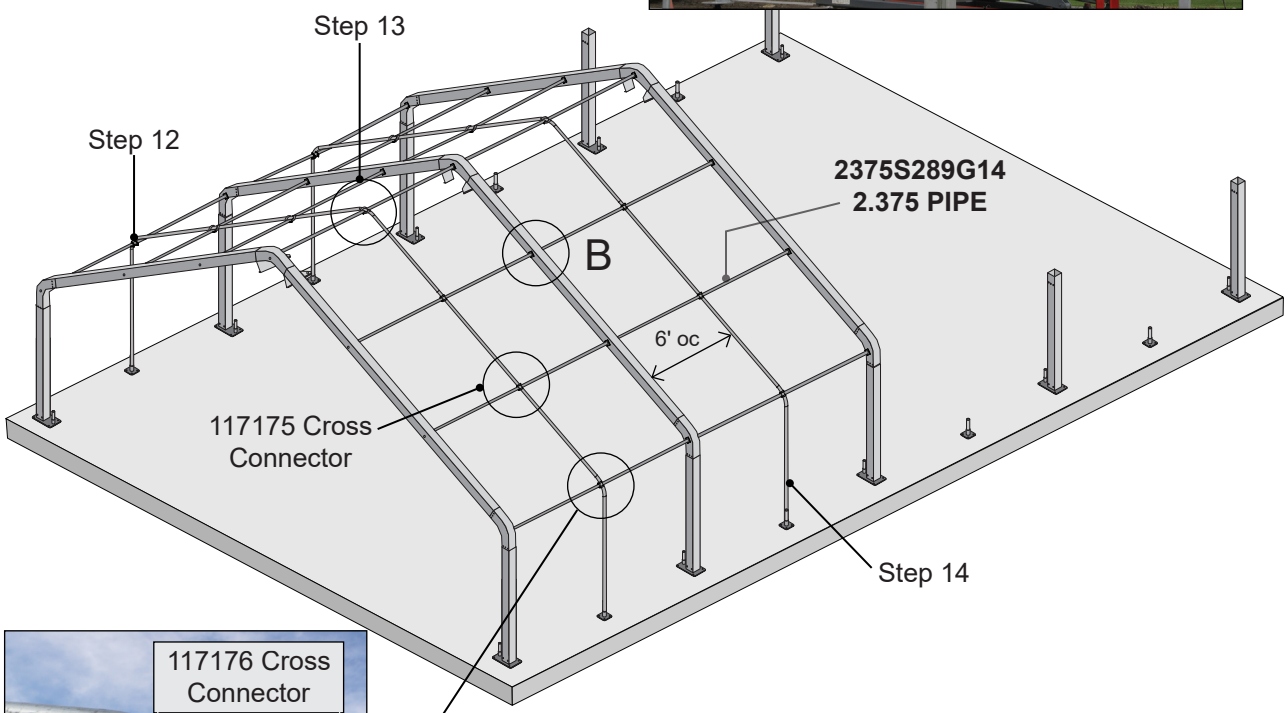

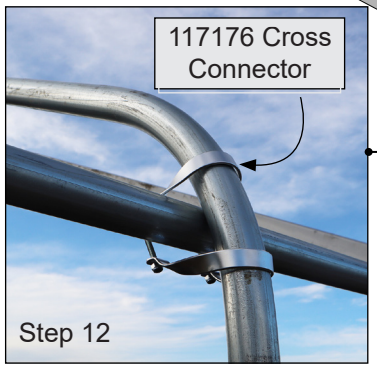

CROSS CONECTOR GUIDE:
117175 CROSS CONNECTOR FOR 2.375" PIPE
117176 CROSS CONNECTOR FOR 2.875" PIPE

Actual frame may differ in length.

3

FRAME ASSEMBLY – continued

GREEN

15. Repeat the steps to set the next two (2) square-tube rafters and the round rafters between them. Brace in place as previously instructed.

    ATTENTION: For the 48' long building (shown), the final square-tube rafter will be a Style A rafter set at the end rafter position.

16. Refer to the side profile diagram for your building and select the next sections of pipe used for purlins. *These* **2875S294G14** *pipes are 24' 6" long.*

17. At the sidewall joint of the square-tube rafter at each side, insert the purlin pipe — plain end first — into the purlin hole.

18. Continue sliding the pipes through the square-tube rafters and connect the pipe to the purlins installed earlier.

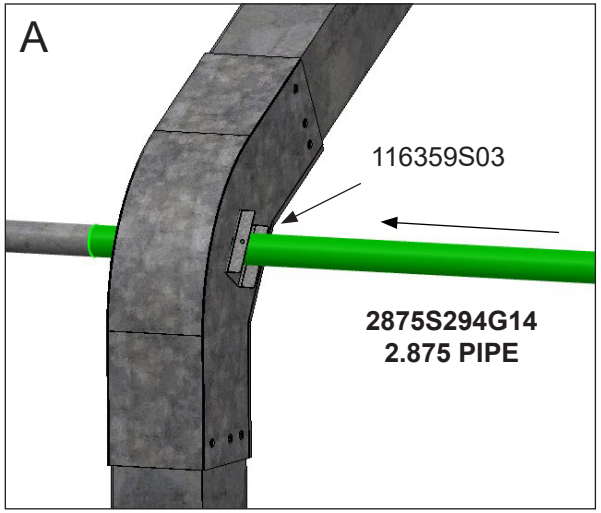

ATTENTION: Add a 116359S03 purlin pipe connector to each purlin. Position these ***on each side of the Style B square-tube*** rafters and the inside of **Style A** rafters.

REMEMBER TO INSTALL THE 116359S03 PURLIN PIPE CONNECTORS DURING THE INSTALLATION OF THE PURLIN PIPE.

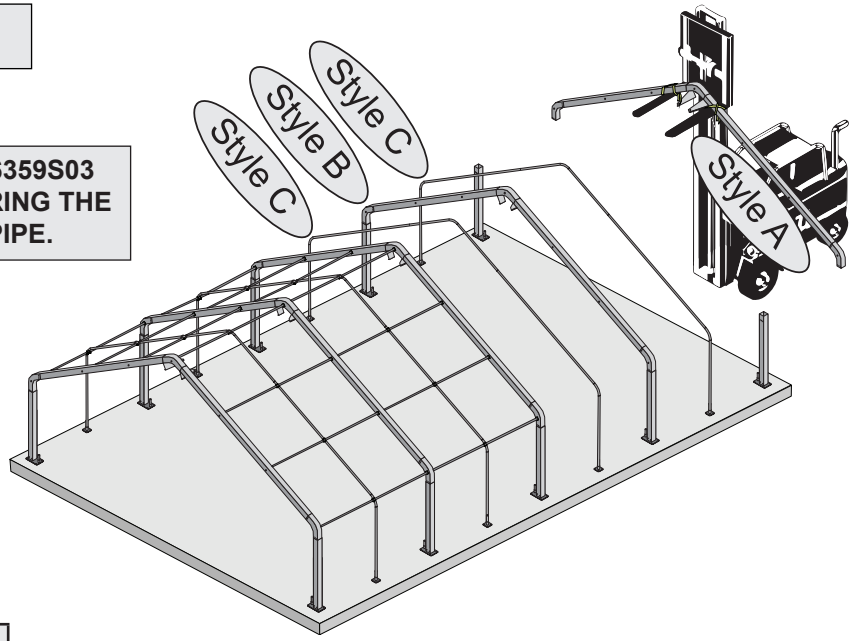

DIAMETER	PURLIN LOCATION
2.375"	ALL UPPER PURLINS
2.875"	CORNER PURLINS

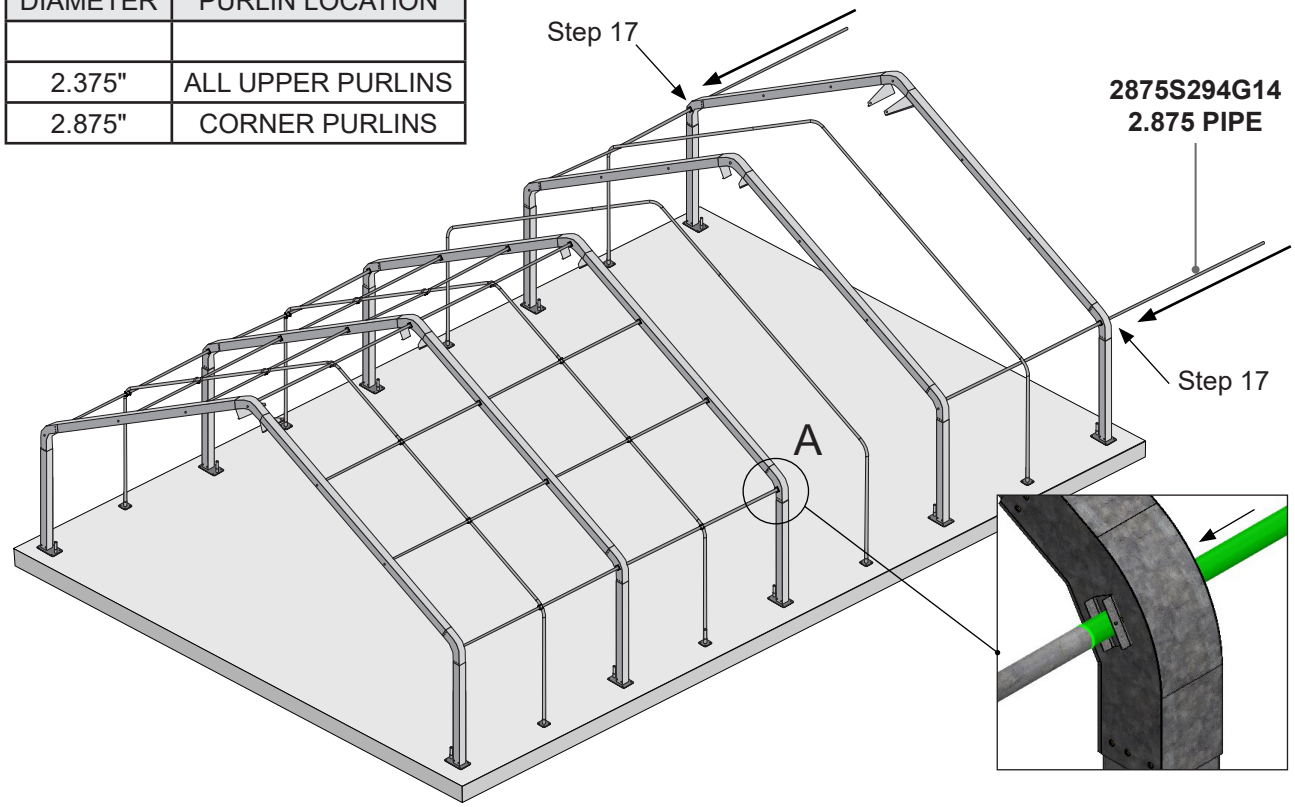

3

FRAME ASSEMBLY – continued

19. Continue adding the remaining purlin pipes at the peak and between the peak and sidewall ***until all purlins are installed*** for the 24' frame section.

20. Move to the square-tube rafter anchor bolts and tighten as previously described. ***Ensure rafters are plumb and square.***

21. Repeat the steps to set the on-center spacing for the Style C round rafters and to install the **117176** cross connectors at each corner.

22. Move to the end (Style A) rafter set in Step 1 and verify that ***all purlin pipes*** remain flush to the outside face of the rafter.

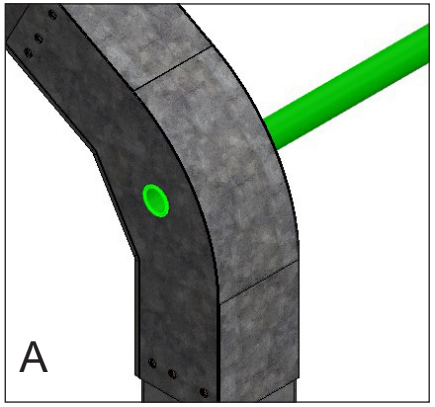

23. Move to each purlin position on the inside of the end square-tube rafter and attach the purlin pipe connector to the rafter and to the purlin pipe. Use FA4482B Tek screws. Install in the pre-drilled holes of the frame tube when present.

24. Move to the next square-tube rafter (Style B) and repeat the previous step and attach those purlin pipe connectors to the rafter and purlin ***on both sides of the rafter***.

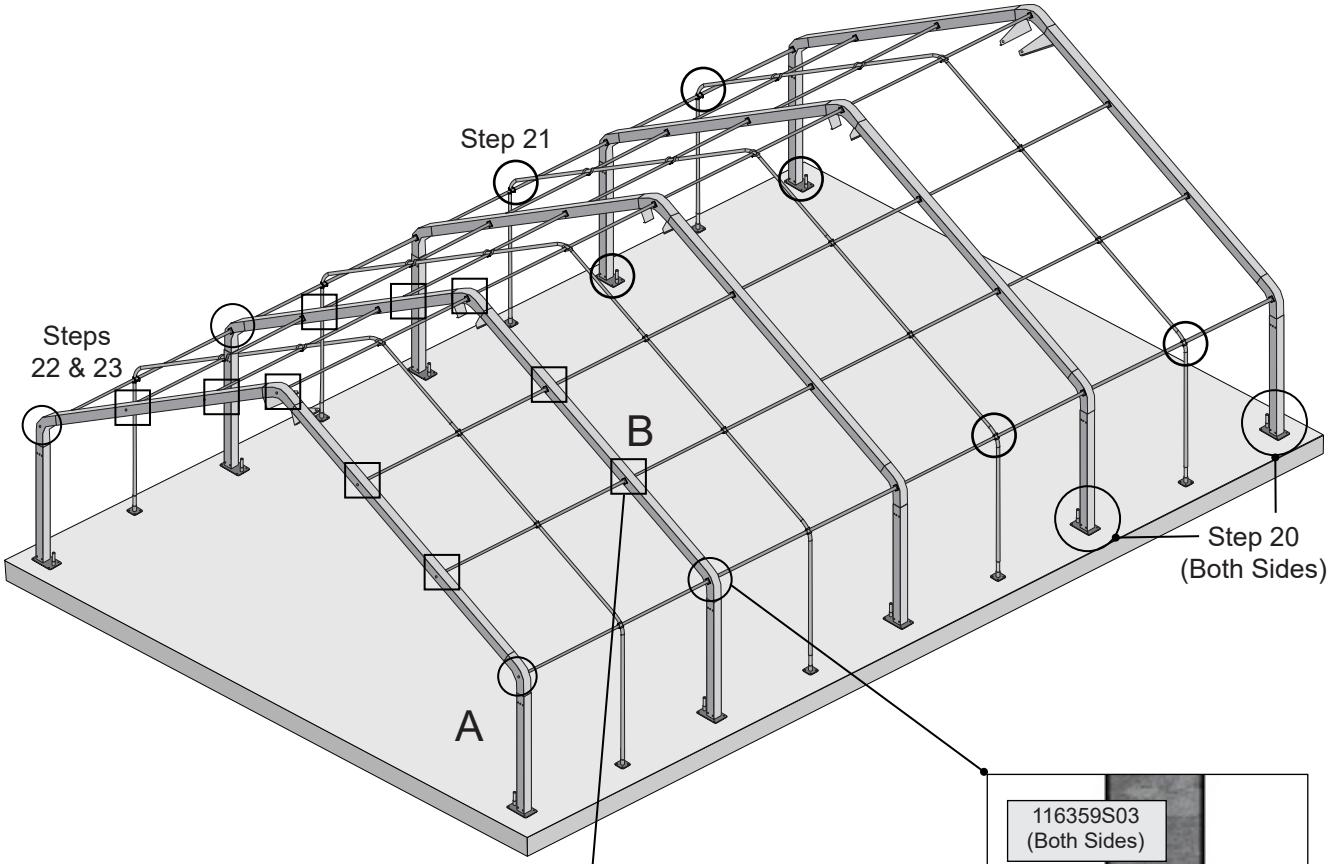

Step 22 (inside view of end rafter)

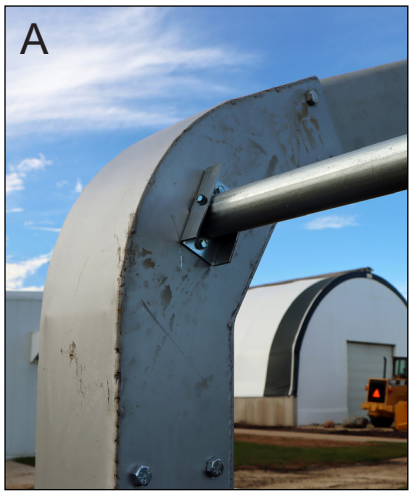

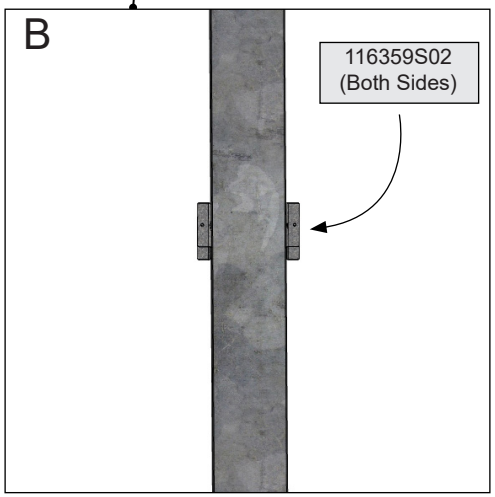

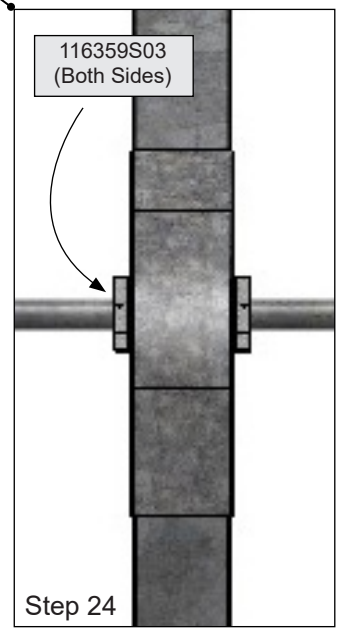

3

FRAME ASSEMBLY – continued

25. Repeat steps as needed to complete the assembly of the frame. When setting the last end rafter (Style A), install so peak brackets (116996S02/116997S02) point toward the inside of the frame.
26. To complete each purlin run at the end rafter, install the 9" purlin pipe to cap the tapered end of each pipe. Slide the pipe into the hole in the rafter and over the end of the installed pipe. Mark and trim pipe to length if needed. ***Final position is flush to the outside of the end rafter square tube.***
27. Return to all round pipe rafters (Style C) and install all remaining cross connectors to secure the purlin to the rafter. After each connector is tightened, install Tek screws to secure the cross connector to the rafter and to the purlin as shown at the right.
28. Install Tek screws as needed for all remaining cross connectors for each round rafter to secure the connector to the rafter and purlin.
29. Return to each purlin pipe connector and verify each is attached to the square-tube rafter (each side for Style B). Install FA4482B Tek screws to secure each connector to the purlin.

    ATTENTION: IF PURLINS WERE ASSEMBLED ACCORDING TO SIDE PROFILE DIAGRAMS, THE PIPE SPLICES WILL BE SECURED DURING THE INSTALLATION OF THESE TEK SCREWS.
30. Return to all base plate anchor bolts and check that each is tight.
31. Continue with the next procedure.

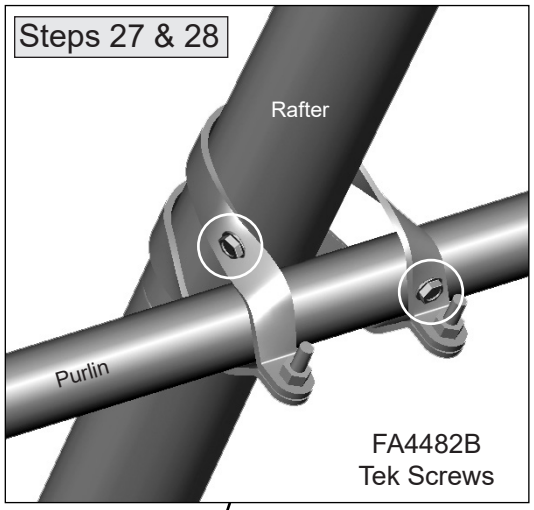

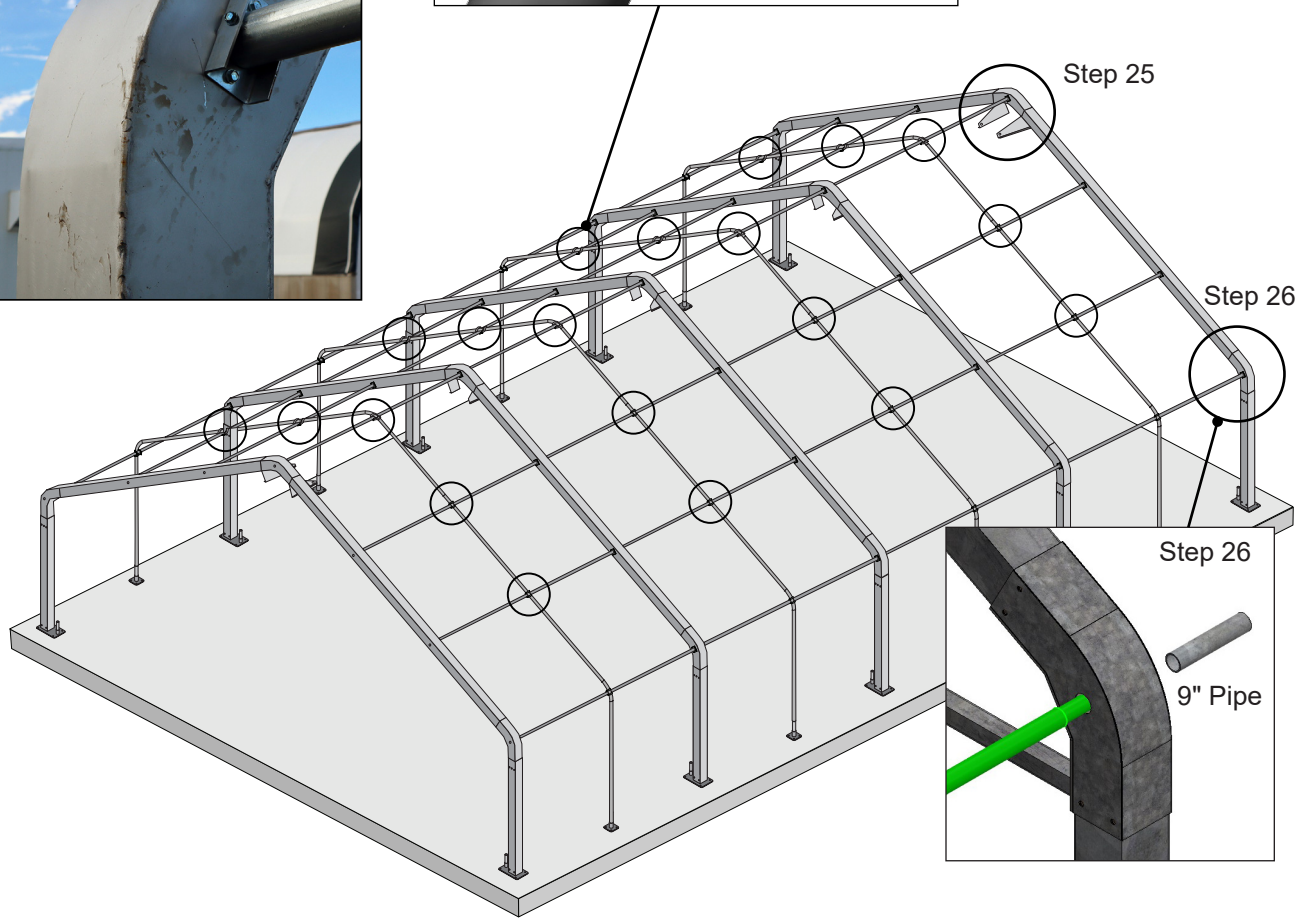

4 INSTALL END WALL FRAME

GREEN

There are different end wall layouts for this building: one with the double entry door and one without a door (solid). The end wall without the double door is typically where the evaporative cooling system and vent are installed when equipped (LE & SE models only.) Read the following information, ***then install the end wall frames***:

- Review ***ALL End Wall Frame Layout diagrams*** in the Quick Start Guide for dimensions and details ***before you begin***.
- Determine at which end of the building you want to position the door.
- Cut 2" x 2" frame tubes from the S20P144 (12') tubes. Tubes that attach to the end rafter are beveled. Review the end wall diagrams for tube identification for all beveled-end 2" x 2" tubes.
- Attach brackets in the positions and orientations shown using FA4482B Tek screws.
- Do not install any bracket within the opening for the fans (below), double door (below), or the evaporative cooling system (End Wall Frame — Solid). See diagrams in Quick Start section.
- Use 2" x 4" tubes cut from the R24P096G11 tubes to frame the opening for the door. See Quick Start section for fitting details.
- For the S/SE models (shown), secure base tubes to concrete using the FA7145 fasteners. ***Drill holes for fasteners through the tube using a 1/4" bit for metal; use the masonry bit included with the fasteners to drill holes in the concrete.***

  IMPORTANT: See the diagrams on pages 51-52 for the L/LE models.
- Apply a bead of sealant (included) to seal the joint where the base tube meets the concrete. Allow to set.
- After end wall frames are installed, continue with the next section.

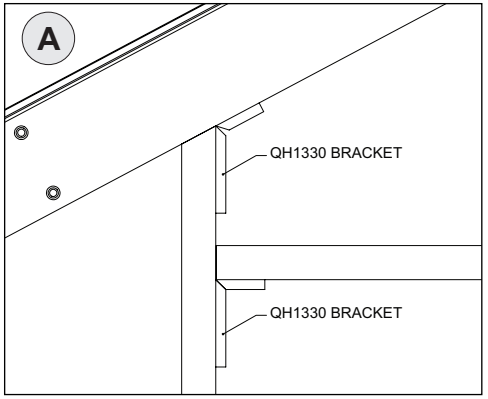

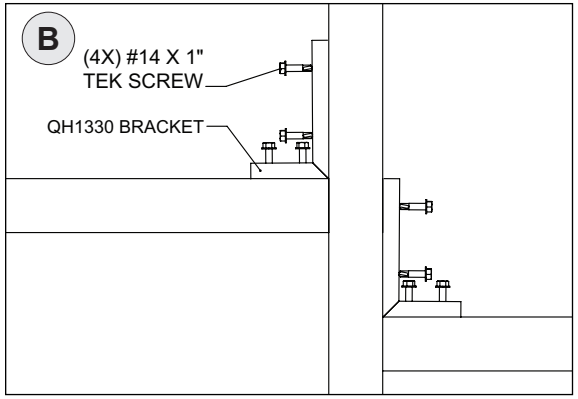

ATTENTION: Install brackets in locations that will not interfere with the end wall cladding installation or other components if equipped.

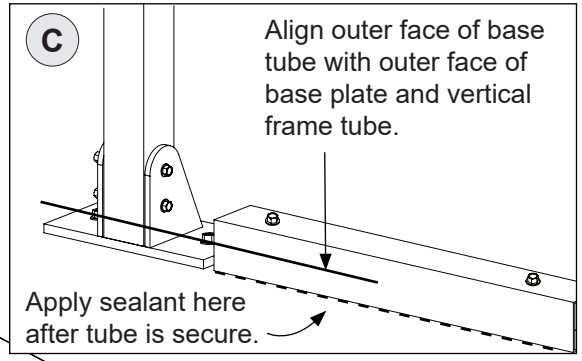

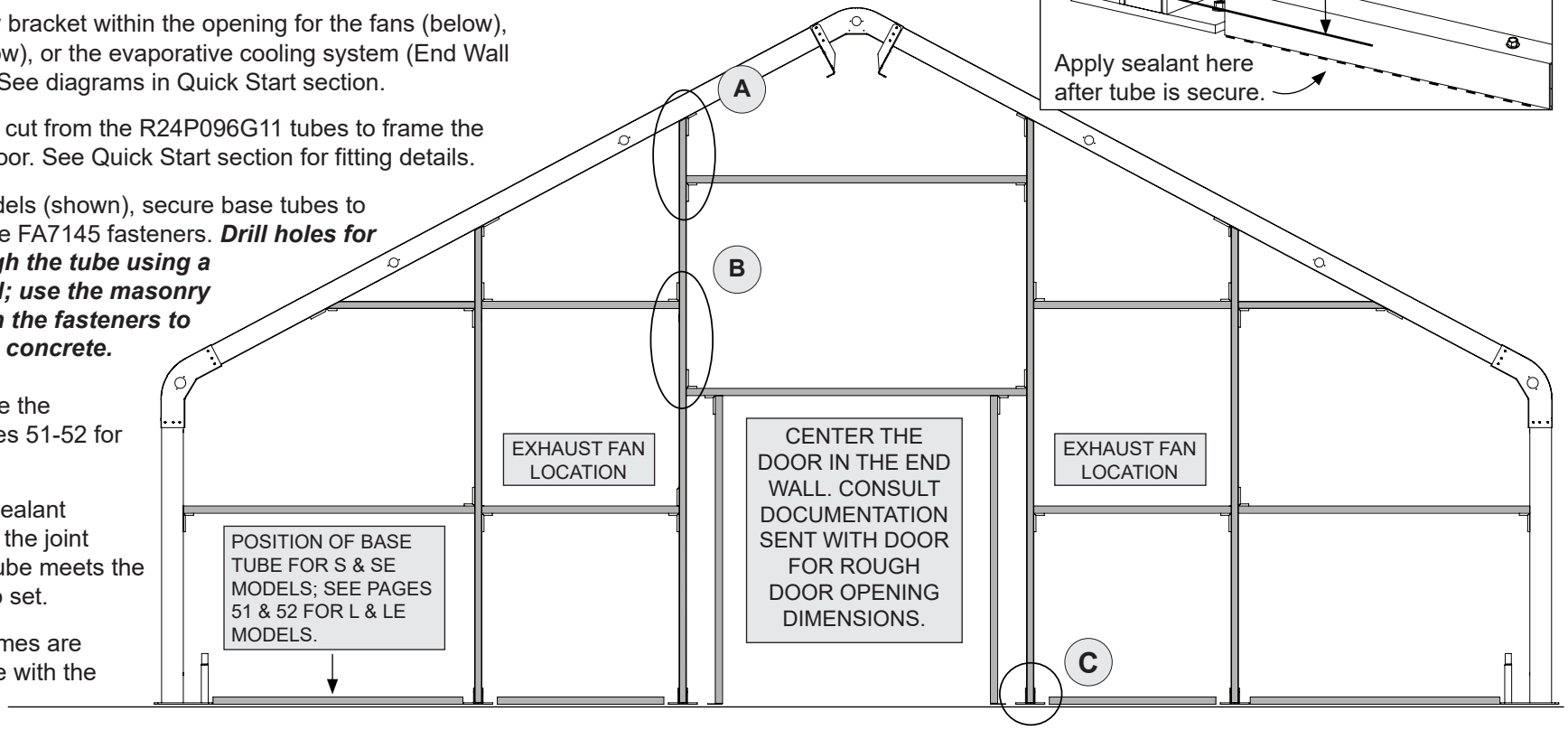

5 ATTACH BASE TUBE TO CONCRETE

BLUE

ATTENTION: If the base tube is included with your building, complete this section and install the base tube. If the base tube or baseboard are supplied by the customer/contractor, review the information in the Quick Start section to install a customer-supplied base tube or baseboard. ***This is a required component of the building frame. Review the diagram in the Quick Start section for a customer-supplied wood baseboard for additional details.***

Base tubes run between the rafter base plates along each side of the frame. Typically, base tube are attached to the concrete slab using the included FA7145 fasteners.

Complete these steps:

1. Locate the base tubes (S20P144) and FA7165 fasteners. ***Drill holes for fasteners through the tube using a 1/4" bit for metal; use the masonry bit included with the fasteners to drill holes in the concrete foundation.***
2. Run a string line along the side of the frame at the base plates to mark the outside face of each rafter.
3. Measure between the first set of base plates and cut a tube to that length from a S20P144 (2" x 2" x 144").

   NOTE: If base plates were set correctly, all base tube lengths should be the same. Measure and cut as needed.
4. Set the base tube in place, align the outside face with the string line, and secure the tube to the concrete slab.
5. Repeat the steps to cut and install base tubes along both sides of the frame until all are installed.
6. Return to all base tubes and apply a bead of sealant (included) ***at the joint where the tubes meet the concrete along both sides***. Allow sealant to cure. See dashed line in the diagram to the right.
7. Continue with the next section.

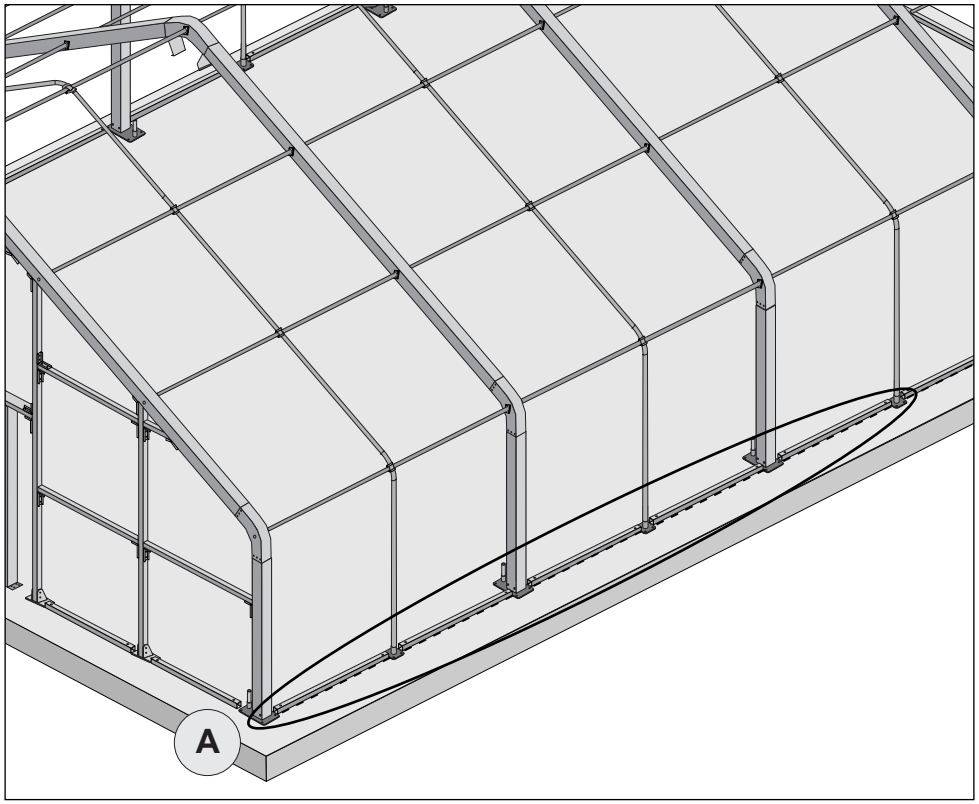

A

TOP VIEW — SIDEWALL

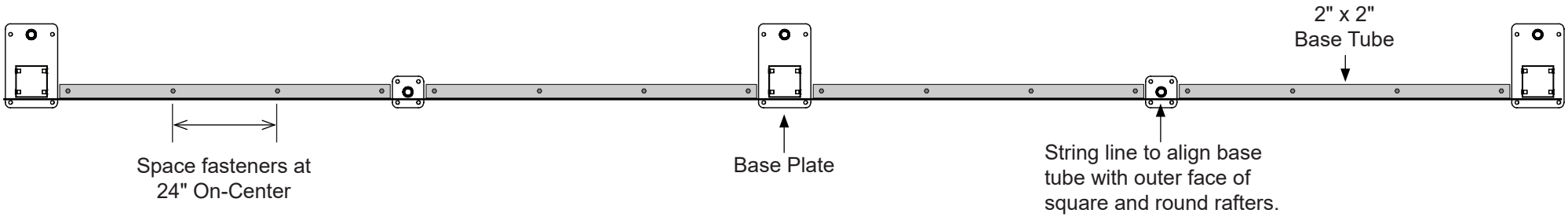

6 INSTALL DIAGONAL STRUTS

Complete these steps:

1. Locate all **ST15518D13G17S1** diagonal struts. There are eight (8) total for each building length.
2. Using the side profile diagram for your building length, attach each strut ***to the inside of the square-tube rafters*** using **FAG355B** (3/8" x 1") bolts.

   NOTE: If a mounting hole in the strut does not align with the mounting nut installed in the rafter tube, use a 7/16" drill bit and drill a new mounting hole in the flattened end of the strut.
3. Tighten all 3/8" bolts until snug. ***DO NOT USE AN IMPACT WRENCH TO TIGHTEN THESE BOLTS. DOING SO MAY DAMAGE THE INSTALLED MOUNTING NUT!***
4. Continue with the next procedure.

DETAILS AS SEEN STANDING INSIDE THE BUILDING.

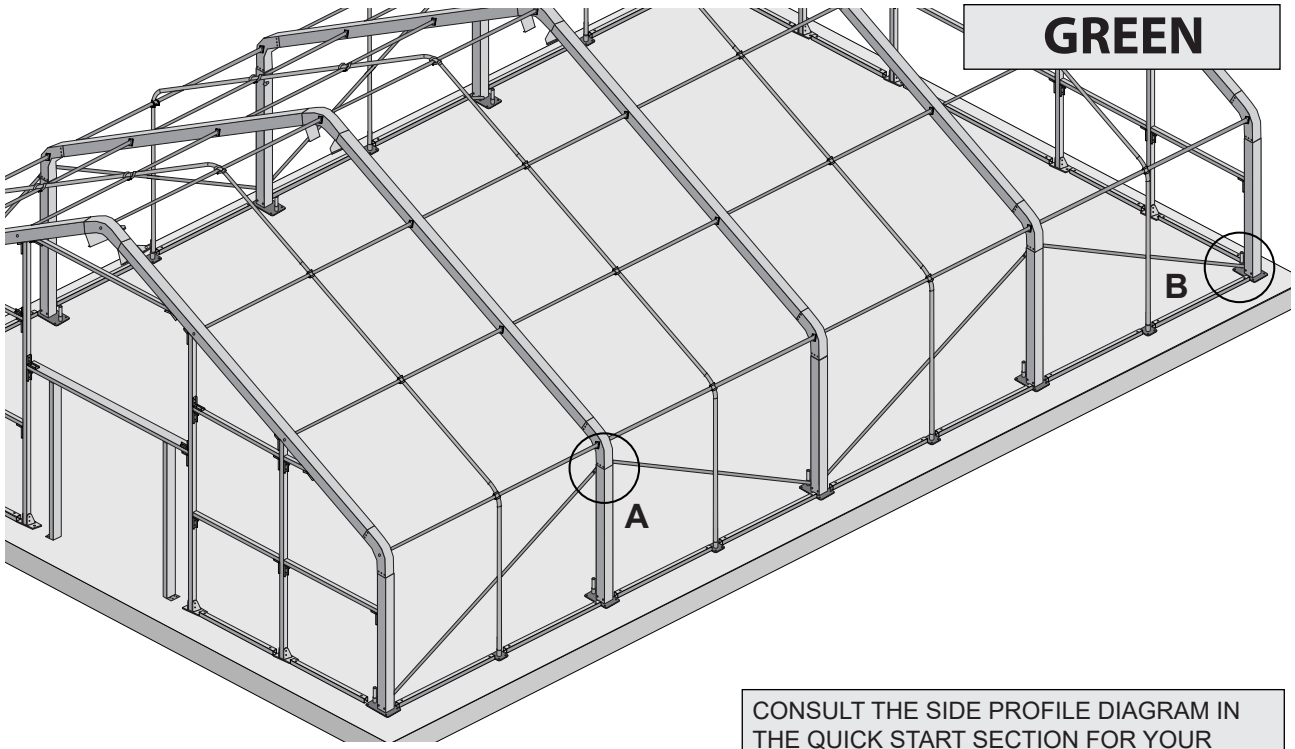

CONSULT THE SIDE PROFILE DIAGRAM IN THE QUICK START SECTION FOR YOUR BUILDING FOR CROSS BRACE LOCATIONS.

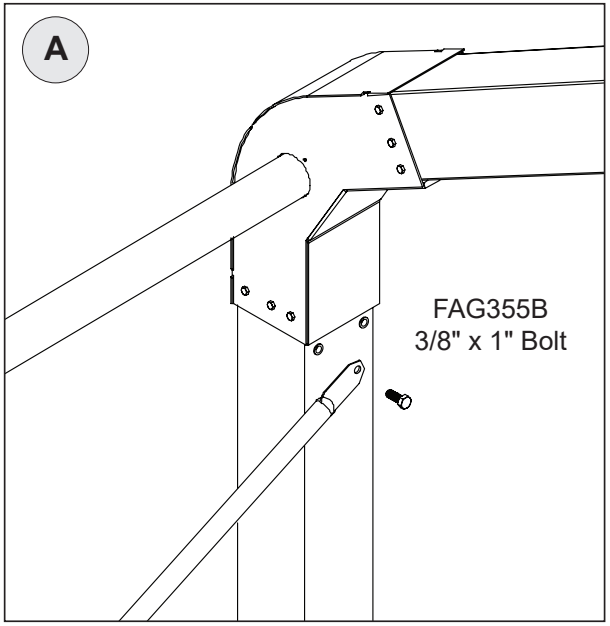

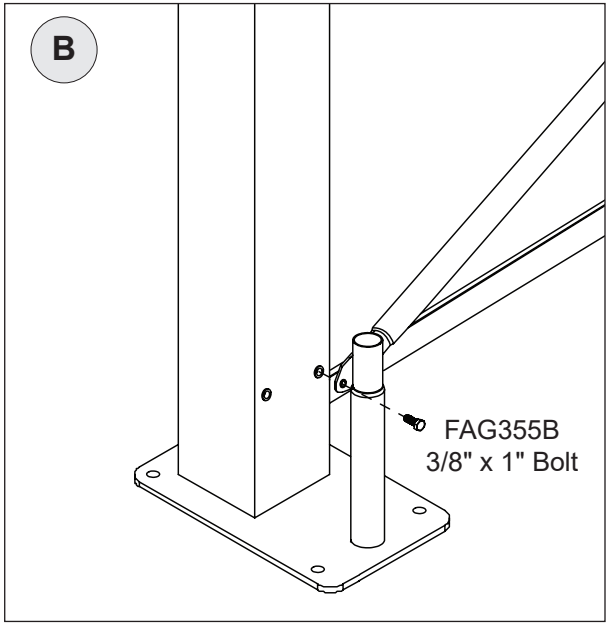

Install Mounting Bracket (116362) for Drive Motor

6 INSTALL MOUNTING BRACKET FOR DRIVE MOTOR

The drive motor for the interior blackout system mounts *outside the end wall* at the peak of the end rafter. *Before* the end wall cladding is installed, attach the mounting bracket (116362) for the drive motor as shown.

Complete these steps:

1. Determine at which end you want to position the motor. Consider final appearance, electrical connections, and other factors.
2. Mark the center of the peak joint assembly. Measure 1-1/2" down from the top of the assembly/rafter and mark the location.
3. Take the 116362 mounting bracket and mark the center of the bracket flange that includes the smaller 1/4" mounting holes. These are used to secure bracket to the peak joint assembly.
4. Align the top edge of the bracket with the mark made in Step 2 and align the center marks made earlier.
5. Level the bracket and secure it to the peak joint assembly using four (4) FA4482B Tek screws.

   NOTE: For easier installation of the Tek screws, mark hole locations on the peak joint assembly and ***predrill holes using an 1/8" drill bit and drill.***
6. Read the information on the next page and continue as instructed.

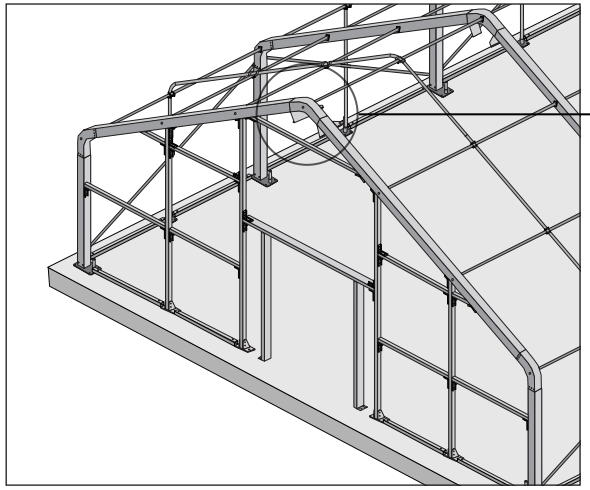

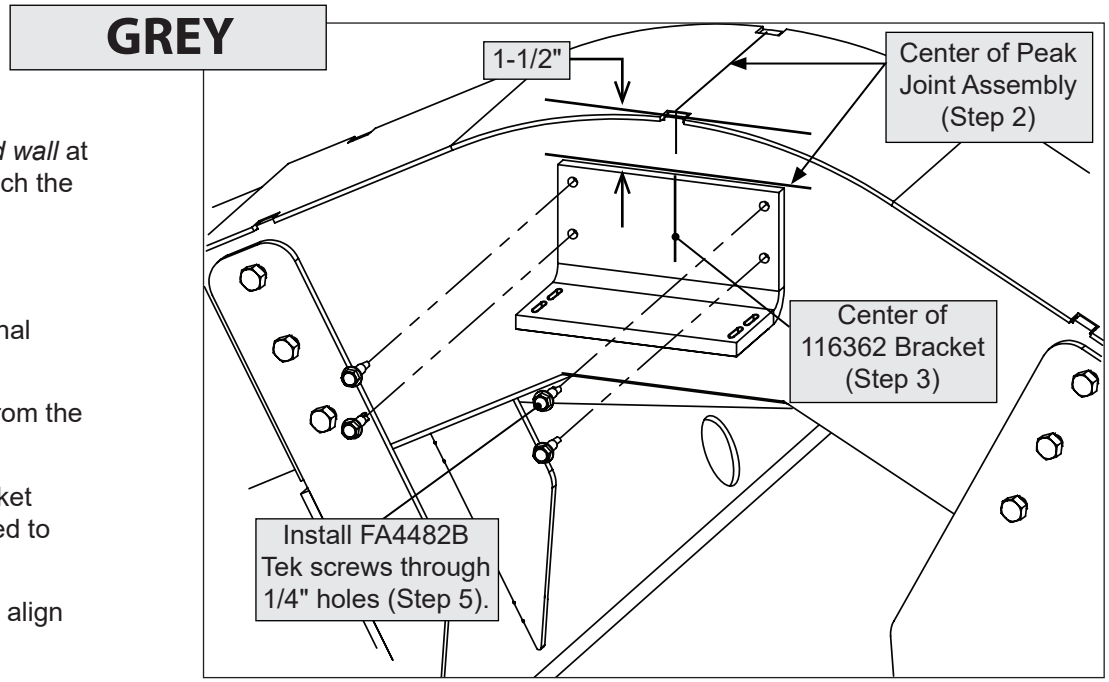

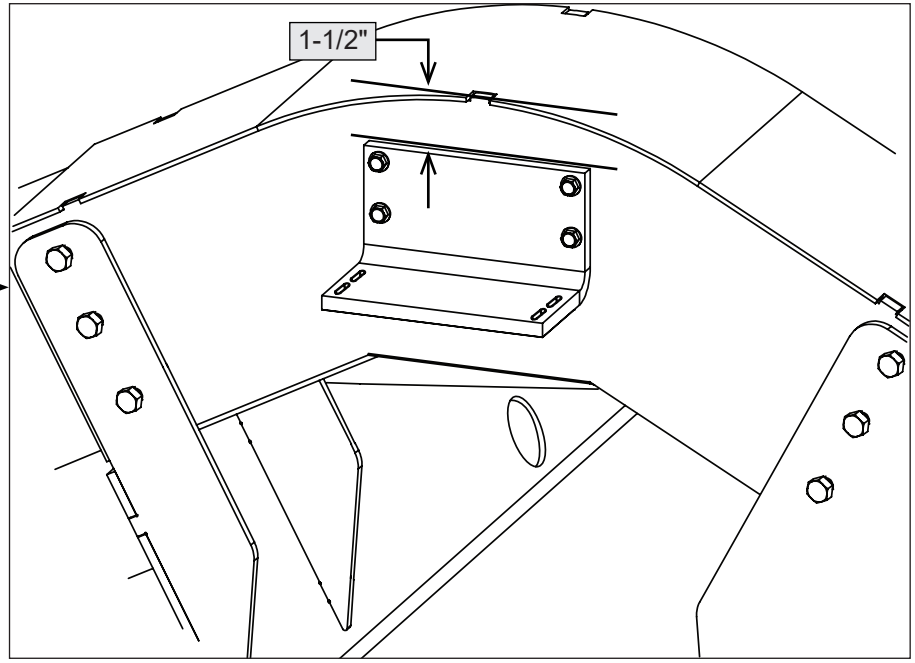

End Cladding, Double Door, & Equipment Pack Components (E)

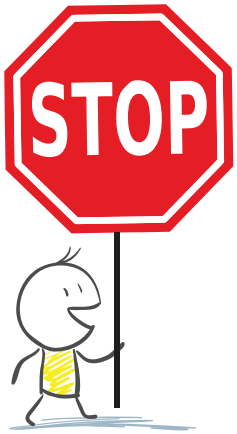

At this point in the greenhouse construction, install the end wall cladding and double door. Go to that instruction manual and complete the procedures as presented. After installing the end cladding, ***return to this guide and continue with the next section. See also the door installation instructions included with the door.***

ATTENTION: Review the documentation included with the equipment packs if purchased. Exhaust fans, evaporative cooling system, and vent can all be installed once the polycarbonate end panels are installed.

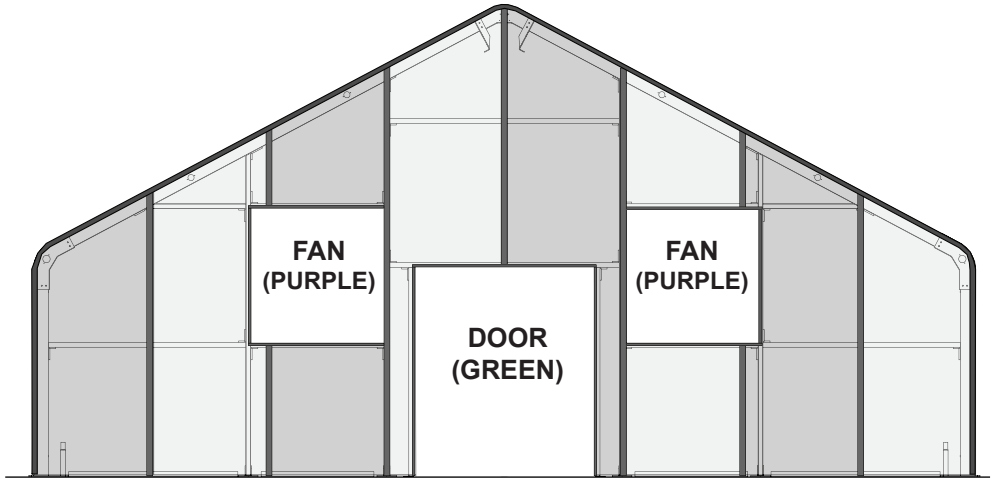

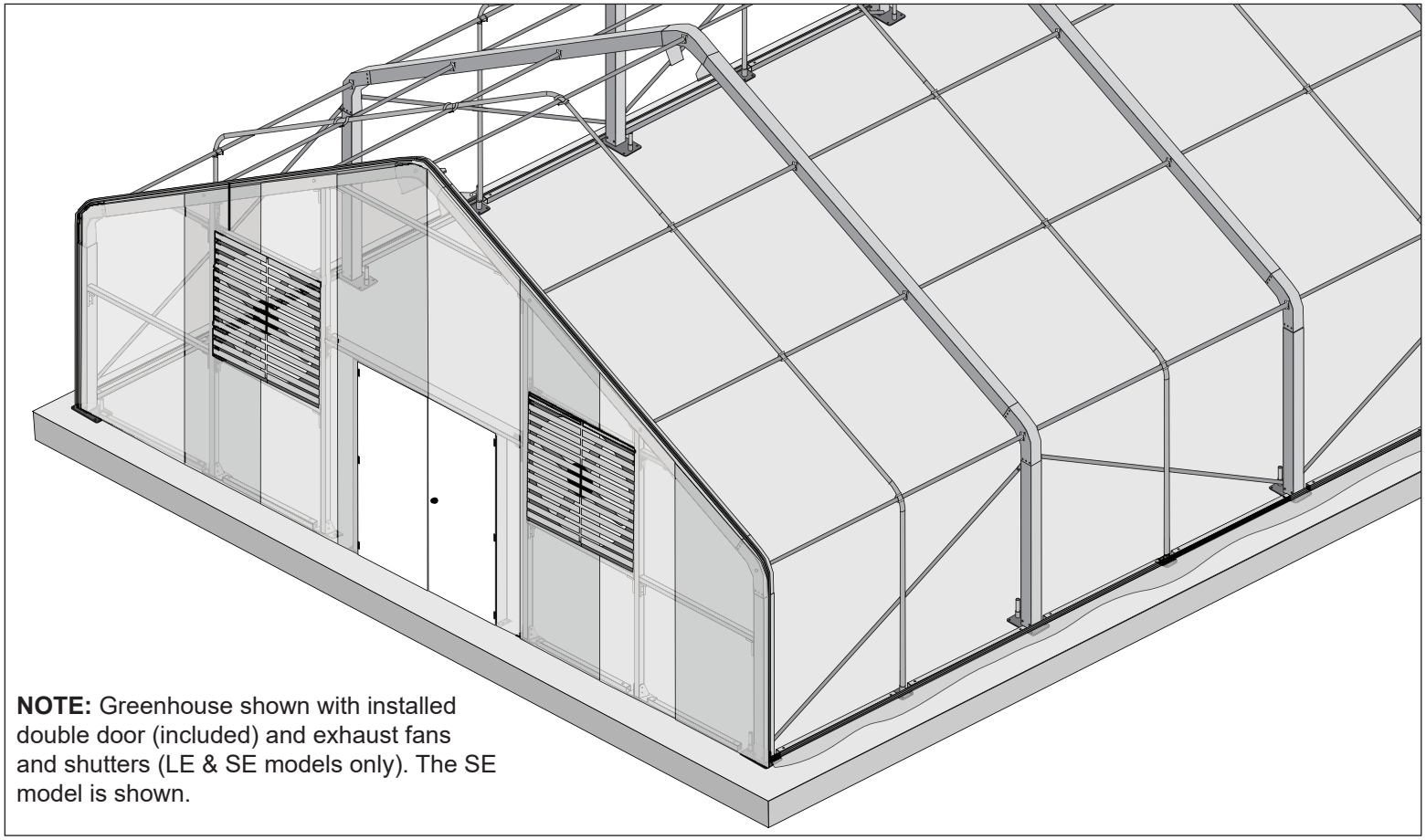

NOTE: Greenhouse shown with installed double door (included) and exhaust fans and shutters (LE & SE models only). The SE model is shown.

7 ATTACH U-CHANNEL TO BASE TUBE

GREEN

The u-channel (102197Z144) used to secure the main film cover to the frame is attached to the base tube (or customer-supplied baseboard) along each side of the frame.

Review the information and details on this page, then attach the u-channel to the base tubes:

- Use FA4482B Tek screws to secure u-channel to base tube. ***(Use wood screws to secure to customer-supplied wood baseboard.)***
- Space screws at 16" on-center throughout the length of the building.
- Begin at one end rafter at the base plate and attach the first u-channel section. Run the section tight to the base plate and the 104546 flashing attached to the end rafter.
- Install u-channel tight to top of each base plate.
- Attach u-channel directly to round rafters and square rafters to span between base tubes. See diagram below.

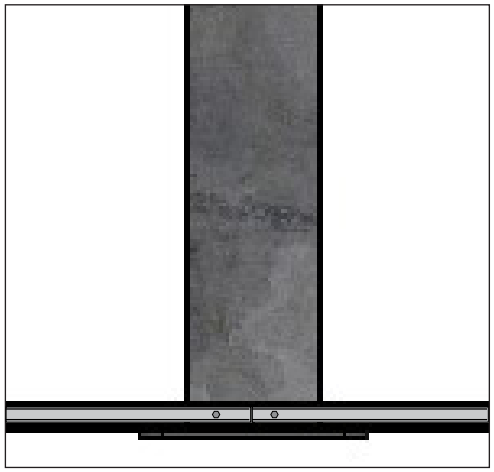

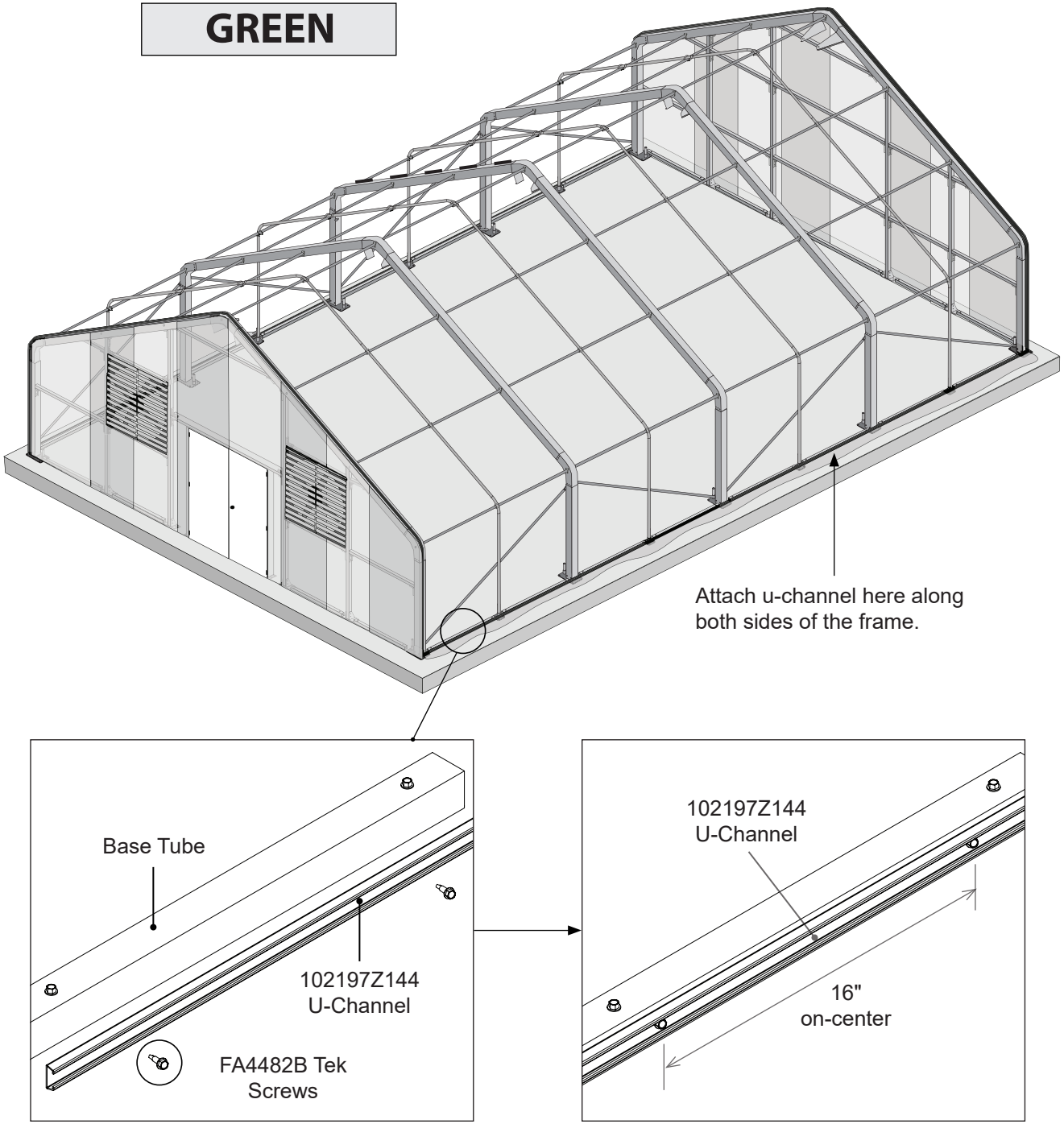

Install Protective Felt Tape (104437)

8 INSTALL FELT TAPE (104437)

Before installing film roof cladding, attach felt tape at each corner and peak of ***every rafter except the two (2) end rafters***. Complete these steps for all **Style B** and **Style C** rafters (**page 11**):

1. Cut twelve (12) 30" pieces of felt tape and attach four (4) pieces (side-by-side) to each corner and the peak of the first square-tube mid rafter (Style B) in from the end rafter.

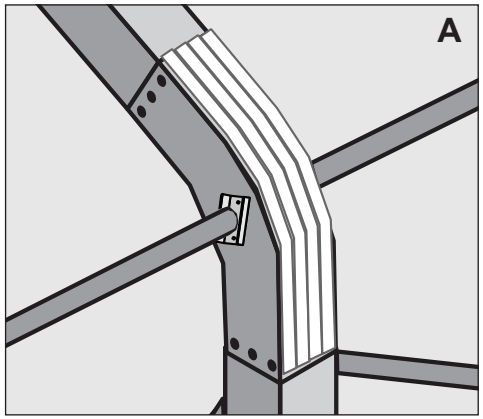

2. Repeat for all remaining square-tube mid rafters throughout the frame length.

   ATTENTION: Do not apply felt tape to either square-tube end rafter.

3. Cut three (3) 18" pieces of felt tape and attach one (1) piece to each corner and the peak of each round rafter (Style C) throughout the frame length.

   NOTE: If needed, secure felt tape ends to the round rafters using the 115198 tape (included) to hold tape in place during film installation.

4. After installing all felt tape, continue with the next section.

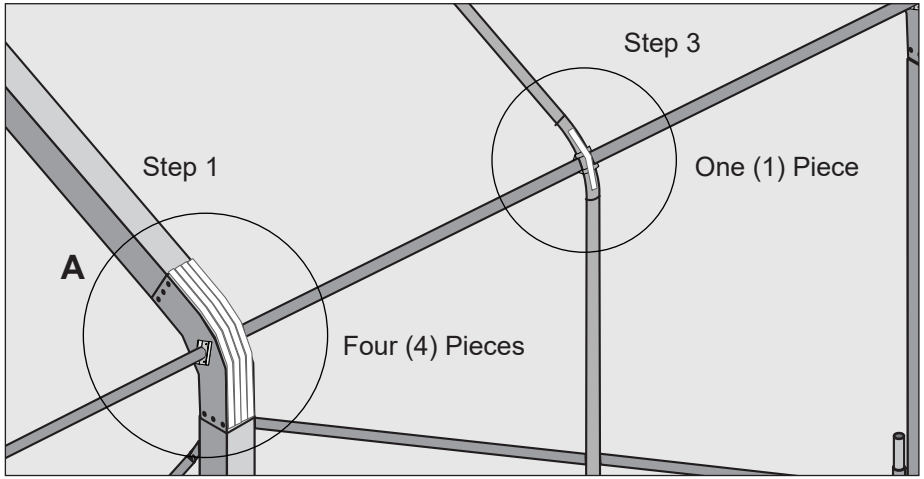

104437 Felt Tape

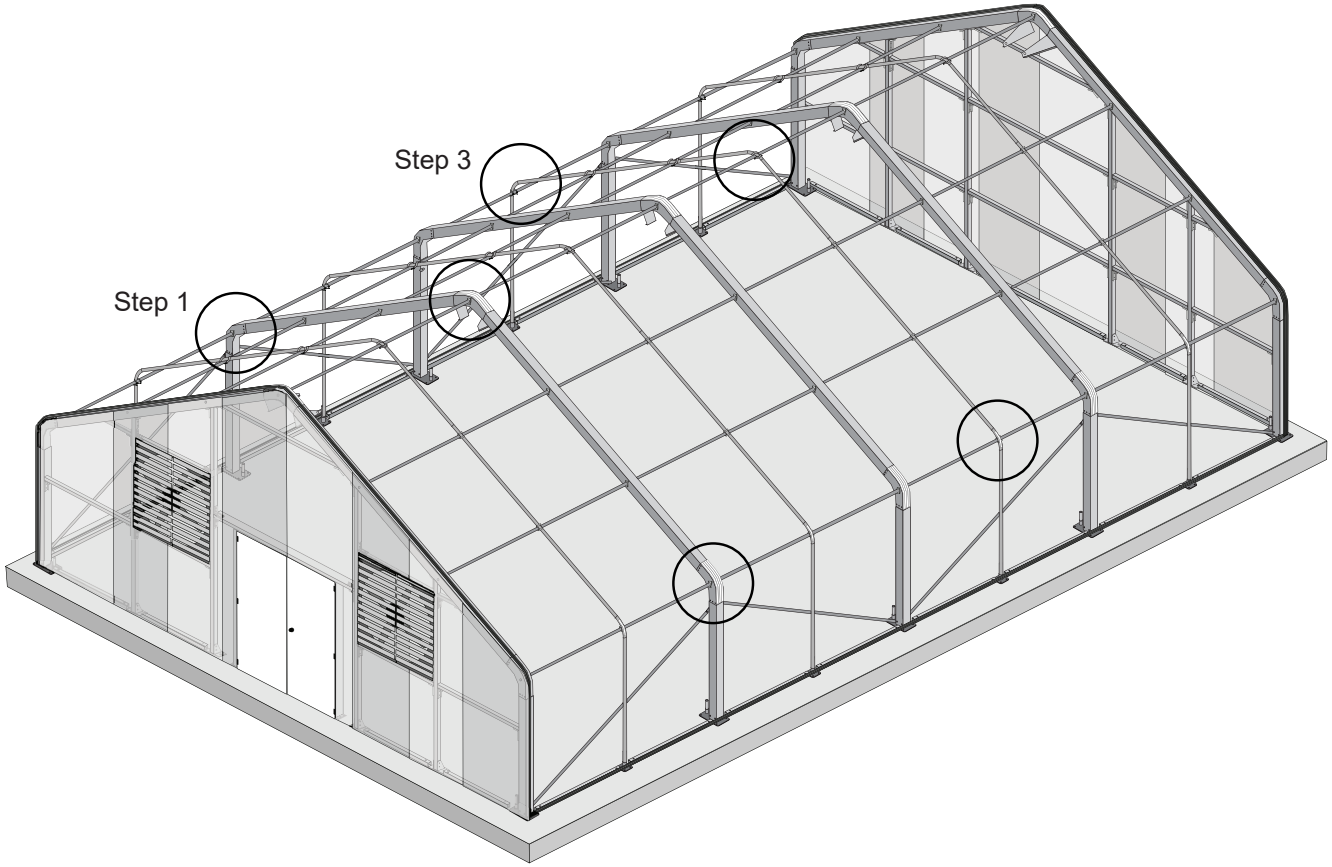

9

GREY

INSTALL PEAK BLACKOUT PANEL

The peak blackout panel spans the entire frame at the peak. For easier installation, install this panel ***before you install the roof film***.
Panel dimensions are 8' x (length of the building) plus 24". Complete these steps to cut and install the peak blackout panel.

ATTENTION: REVIEW PANEL CUT SHEET IN THE BLACKOUT SYSTEM INSTRUCTIONS FOR ADDITIONAL DETAILS *BEFORE CUTTING THE PANEL*.

1. Locate the bulk 116998 blackout material. Clear an area on the site to rollout and cut the material. **SEE BLACKOUT SYSTEM INSTRUCTION GUIDE.**
2. Add 24" to the length dimension of the building and cut a panel of that length from the bulk blackout material.
3. From the panel cut in the previous step, measure and cut the width down to 8' to create the final (8' x length of the frame plus 24") peak blackout panel.

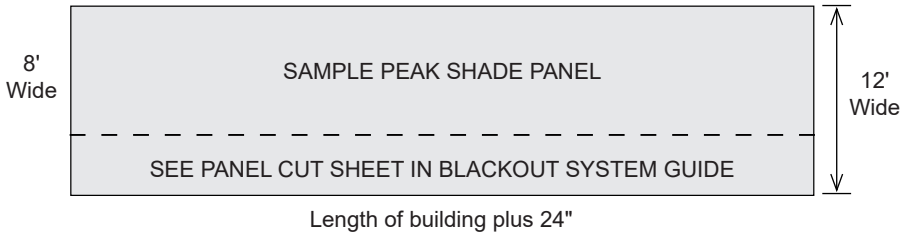

4. With assistance and the proper lifts, place and center the panel at the peak (end-to-end and side-to-side of the frame ***with the white surface toward the sun***.
5. Stretch the panel end-to-end. Using the 115198 tape, secure the panel edges to the square-tube rafters as needed to hold the panel in place
6. With the panel secure, continue with the next procedure.

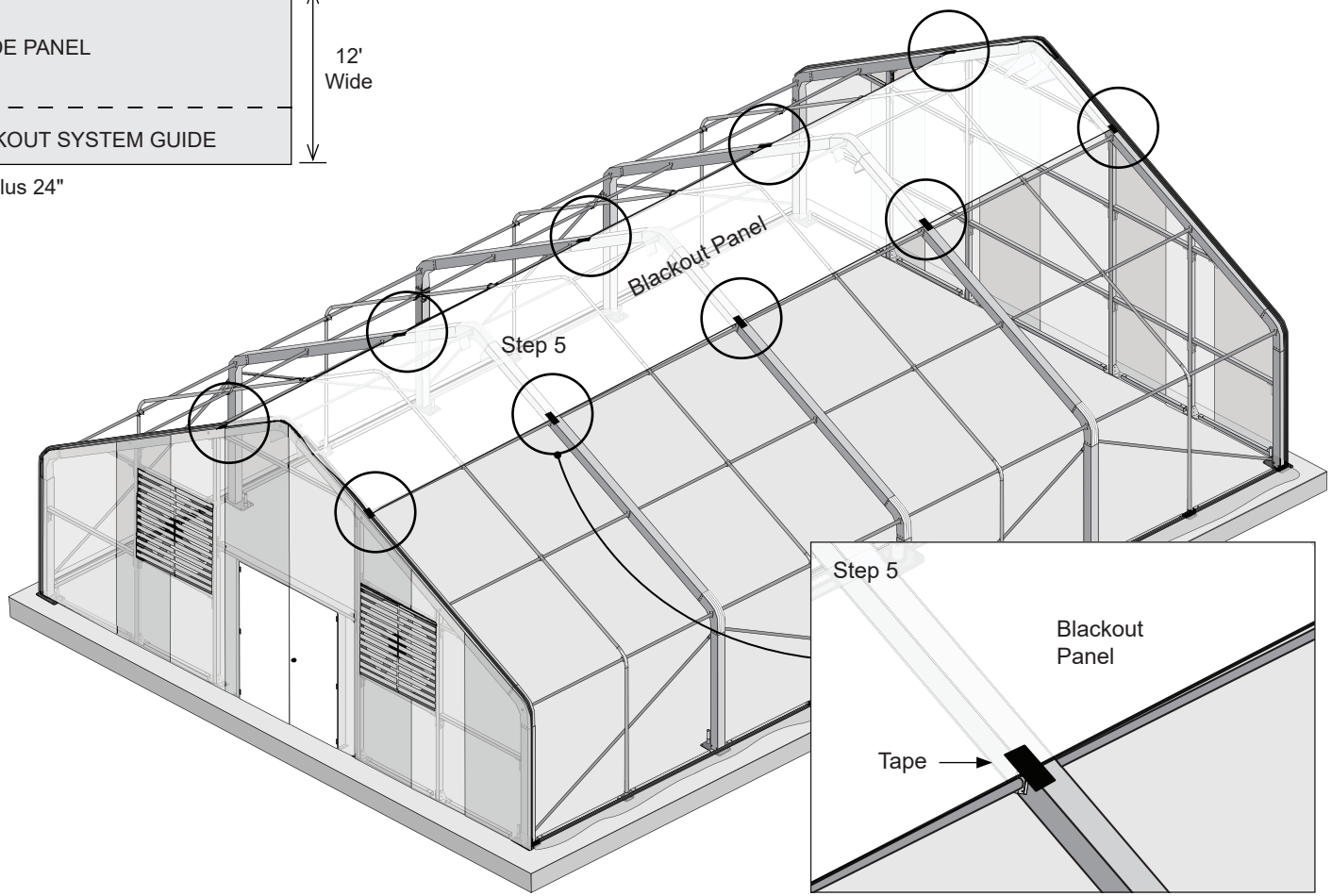

10 INSTALL 2-LAYER FILM COVER – LAYER 1

GREEN

WARNING: To prevent damage to the cover and to prevent serious personal injury, ***DO NOT*** attempt to install the main cover on windy or stormy days.

FOR BEST RESULTS

To improve chances of a successful film installation, ***at a minimum*** it is best to have teams of two (or more) working at opposites ends (at peaks) and along both sides. To achieve best results when securing film layers to frame, one assistant should gently stretch and pull film layer while another installs the 102198A spring.

2-LAYER FILM INSTALLATION

Greenhouses equipped with a double-layer film include a layer that is Infra Red (IR) Retention film: Item 109098. **IMPORTANT!** ***Install the IR/AC film first! Examine the IR/AC film and install it according to the instructions printed on the film. If printing is removed due to cutting, mark the panel to ensure the correct side is installed toward the sun.***

Gather parts:

- Cover film and wire spring (#102198A)
- Ropes/straps long enough to reach over frame ***(provided by customer)***

Complete these steps:

1. Take the film and position it along the base at one side. Ensure IR/AC cover will pull over frame with correct surface positioned toward the soil. Unfold cover and locate edge.

   NOTE: Cover the ground if needed to protect film and to keep film clean and free of debris.

ATTENTION: Main cover film is typically cut two (2) feet longer than greenhouse (e.g., length is 48'; film roll is 50'). When choosing the correct film roll for cover, review documents included with shipment to identify the film. Roll out along frame and measure.

Also, ensure you have selected the IR/AC film for your first layer. ***Install this film first and according to the instructions printed on film.***

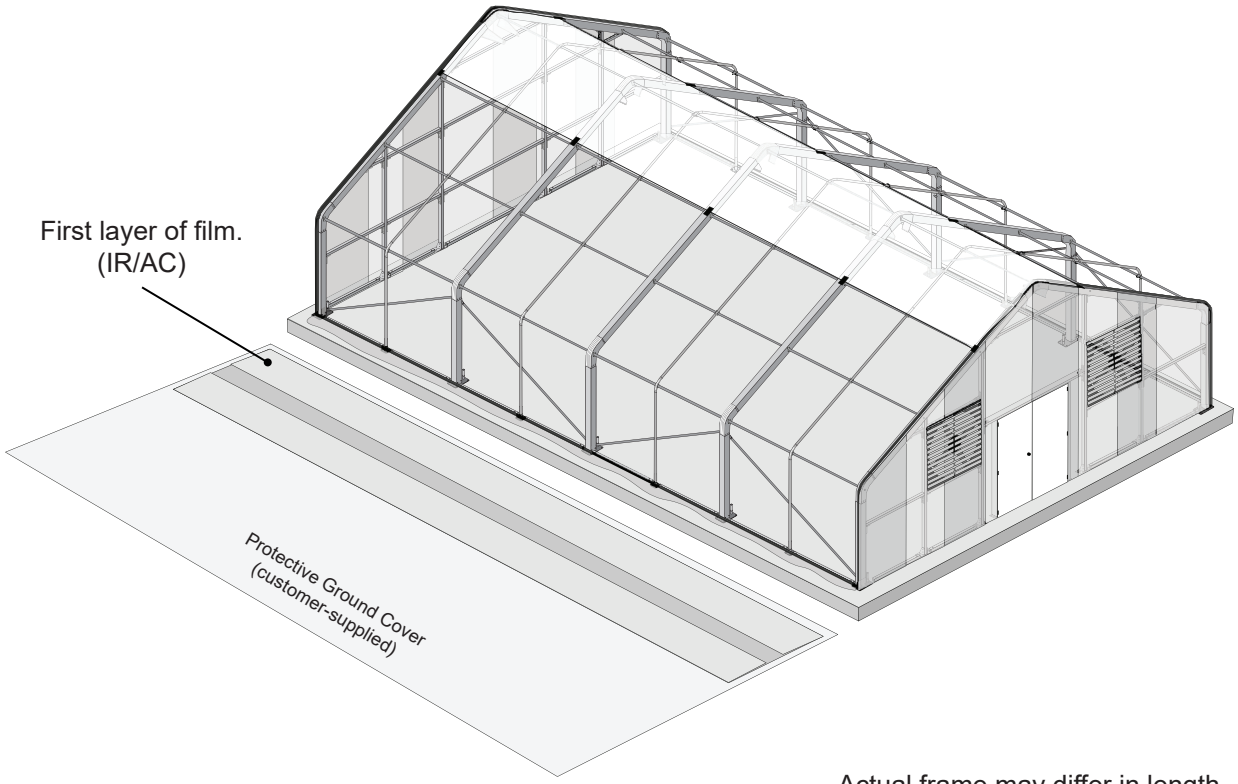

Actual frame may differ in length.

10

INSTALL 2-LAYER FILM COVER – LAYER 1 (continued)

WHEN INSTALLING SPRING WIRE, ALWAYS WEAR EYE PROTECTION!

2. Along the film edge that will pull over the frame, tie a rope (or strap) around a tennis ball, for example, and ***toss the free end of the rope over frame***. See photo.

   NOTE: Evenly space the ropes along side. The number of ropes depends on the building length; use additional ropes spaced evenly throughout the length to prevent tearing the cover when it is pulled onto frame.

3. After tying ropes to the cover, ***throw the free end of each rope over the building*** and pull the cover onto the frame.

   IMPORTANT: To prevent damage to the cover film during installation, ***use additional personnel and lifts as needed stationed inside frame***.

4. Center side-to-side and end-to-end.

5. Once the film is in place and centered, begin at peak at one end and install the 102198A wire spring into the 104546 flashing.

   ATTENTION: Ensure enough film is present to lock into u-channel flashing. Typically, cover film is cut longer than required to cover frame end-to-end. For easier anchoring, allow approximately 10" to extend past end rafter as film is anchored. Remove ropes (if used) after film is secure.

6. Continue down both edges of the first end rafter until the film is secured.

7. Pull film toward the opposite end and stretch gently to remove wrinkles.

Photos show building without end walls and blackout peak panel. Actual building will have these items installed before film installation. Frame shown may differ from actual frame.

10

INSTALL 2-LAYER FILM COVER – LAYER 1 (continued)

WEAR EYE PROTECTION WHEN INSTALLING SPRING WIRE!

8. Move to the other end rafter, pull film tight, and repeat steps to secure film to the 104546 u-channel flashing attached to that end rafter .
9. After securing the cover end-to-end, move to the u-channel attached along one side, and install 102198A spring wire to secure film edge. See dashed line in diagram below.

   NOTE: Beginning at middle, work toward each end keeping wrinkles removed from film during installation. Maintain an even length working along the side.
10. Next, move to remaining side, stretch film, and secure in place. Pull film sung during spring wire installation. Do not trim film length or width at this time.
11. Continue with installation of inflation fan kit *before installing the next film layer*. See next page.

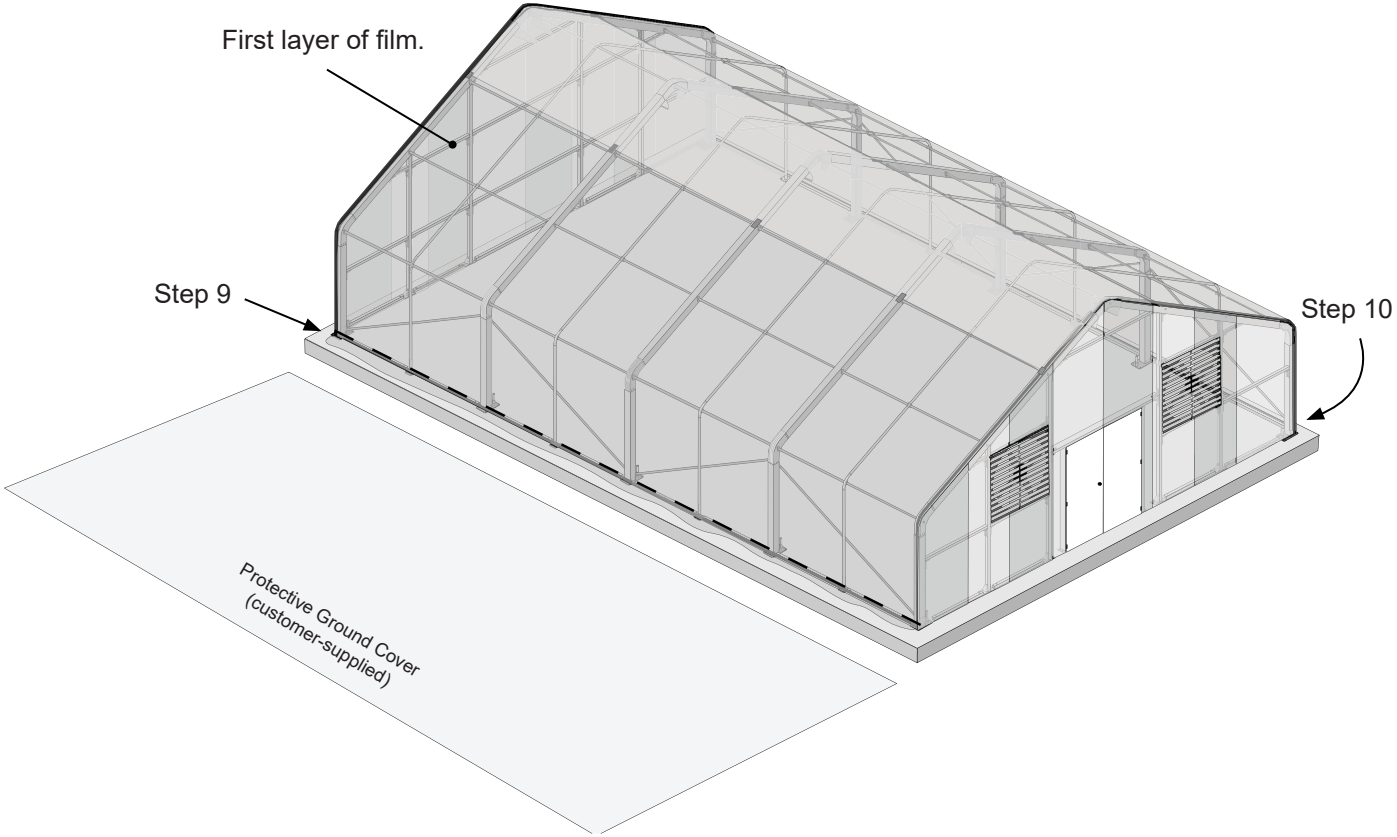

NOTE: Actual frame may differ from what is shown.

Inflation Fan Kit (115842) Installation

The air inflation system assembly is quick and easy. Consult instructions included with the kit for installation details. You will need a socket wrench set, utility knife, marker, and the 115198 tape to complete the steps. ***Actual frame may differ from what is shown in the example. Buildings longer than the example shown may include two (2) inflation fan kits. Install these at opposite corners of the building when possible.***

ATTENTION: Install all air inflation fan kit components before installing the second layer of film. ***Failure to do so will require partial removal of the second film to install fan kit components.*** Locate the inflation fan kit (or kits) and install now according to instructions included with kit(s). Remember to test the air inflation systems before and after installing the second layer of film.

ALL ELECTRICAL WIRING TO BE COMPLETED BY A QUALIFIED ELECTRICIAN ACCORDING TO ESTABLISHED STANDARDS AND CODES.

GREEN

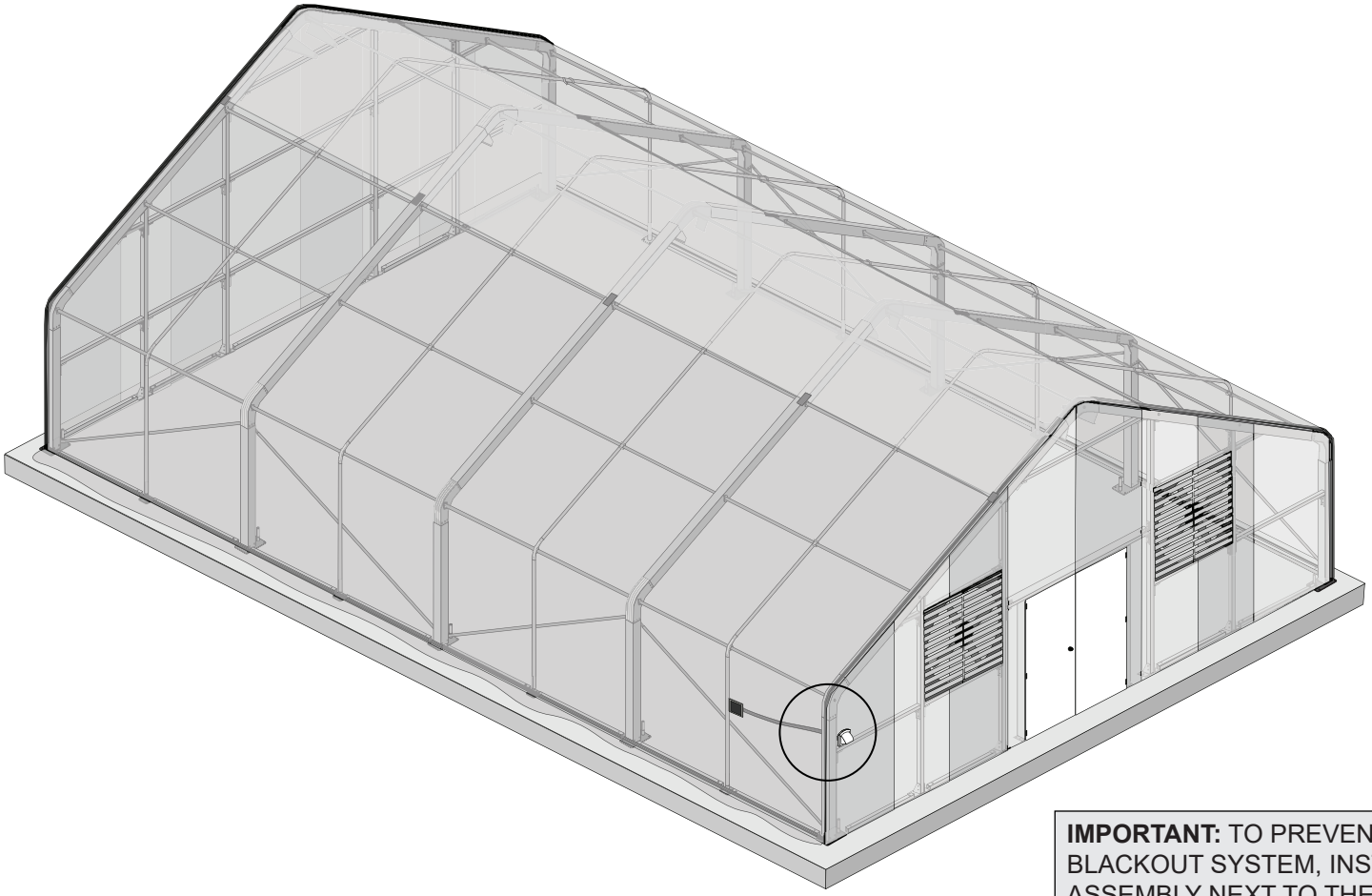

IMPORTANT: TO PREVENT CONFLICTS WITH THE INTERNAL BLACKOUT SYSTEM, INSTALL THE INTAKE HOOD AND DAMPER ASSEMBLY NEXT TO THE SQUARE TUBE END RAFTER LEG. POSITION IT IN THE END WALL CLADDING JUST BELOW THE CORNER CONNECTION FITTING. MOUNT THE INFLATION FAN TO THE ROUND RAFTER IN THE SIDEWALL ROOF FILM (AS SHOWN).

10

INSTALL 2-LAYER FILM COVER – LAYER 2

WEAR EYE PROTECTION WHEN INSTALLING SPRING WIRE!

Once air inflation kit (or kits) are installed, install the remaining film layer for the greenhouse cover. Complete these steps to install remaining film:

1. Repeat all previous steps as needed to install second layer of film. After pulling film onto frame, secure film by ***adding a second run of 102198A spring wire over first in the same u-channel and 104546 u-channel flashing.***

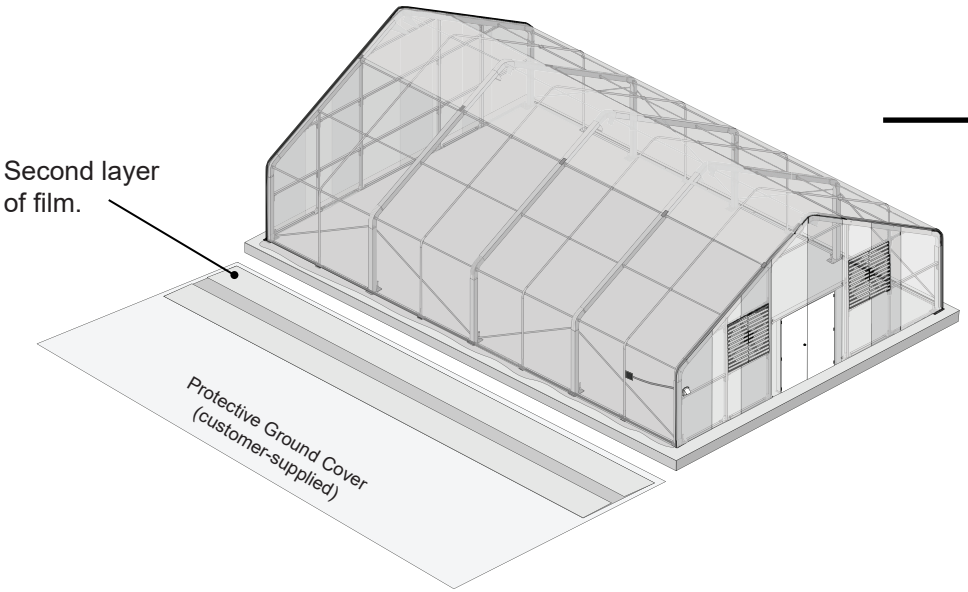

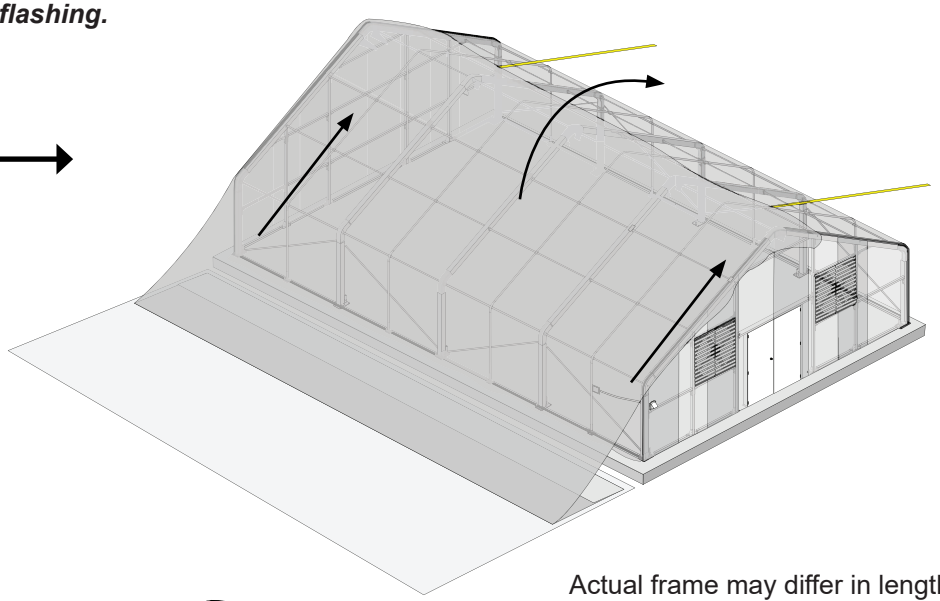

Actual frame may differ in length.

ATTENTION: Install second layer of film with either surface toward the soil. Be careful not to damage the first film layer during installation of second film.

2. Continue with the next procedure.

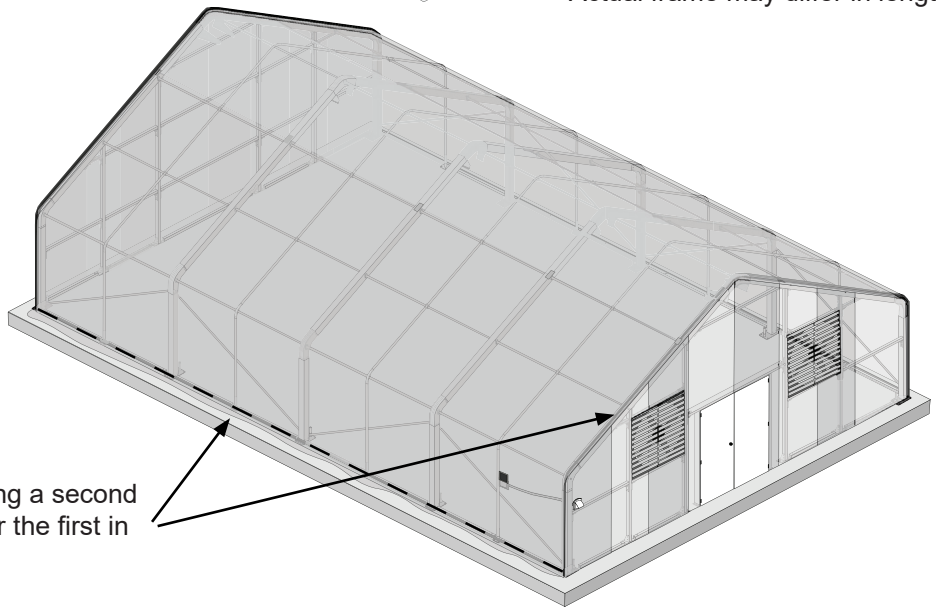

NOTE: Actual frame may differ from what is shown.

11 INSTALL ANTI-BILLOW STRAPS & RATCHETS

GREEN


117094


QH1065

In some regions and weather conditions, installing anti-billow straps and ratchets help stabilize the inflated two-layer film cover. The anti-billow components are included and install easily on greenhouses constructed on a concrete slab or concrete piers. For other foundation options, additional customer-supplied materials may be required to install these same components.

Read the information in this section to install the anti-billow components. Side profiles showing ratchet and strap positions for each building length are on the next page. ***Install the anti-billow components at 24' on-center intervals when possible. Attach to the square-tube rafters for best results.***

Complete these steps:

1. Locate the 117094 brackets and attach one bracket to the first square-tube rafter using two (FA4484B) Tek screws. See next page for locations for building length.

   ATTENTION: Mount bracket over the installed u-channel and secure using FA4484B Tek screws or FAJ113B lag screws, depending on mounting surface.

   Wood Baseboard: If a customer-supplied wood baseboard is present, secure the 117094 bracket to the baseboard using FAJ113B lag screws. For lag screw installation, drill mounting holes in the 117094 bracket to 3/8" for the 5/16" lag screw. ***Predrill holes through u-channel for the lag screws using a 3/8" bit for metal.***

2. Remove the mounting bolt from the QH1065 ratchet and use it to attach the ratchet to the 117094 bracket.
3. Repeat steps to attach all remaining brackets and ratchets to the first side of the frame. See next page for locations.
4. Move to the opposite side of the frame and attach the remaining brackets and ratchets opposite the first assemblies on the same rafter .
5. With all assemblies installed, cut the first strap to reach over the top of the frame. Allow 24" inches of extra strap for easier installation. Strap can be shortened if needed.
6. Connect the strap ends to ratchets by inserting each strap end into the slotted barrel of the ratchet. Operate the lever a few clicks to keep the strap in place.
7. Inflate roof film and tighten straps to slightly retain the film.

   IMPORTANT: Do not over-tighten straps. Ensure straps remain centered over each square-tube rafter. Shorten strap if it binds in ratchet to achieve desired result.

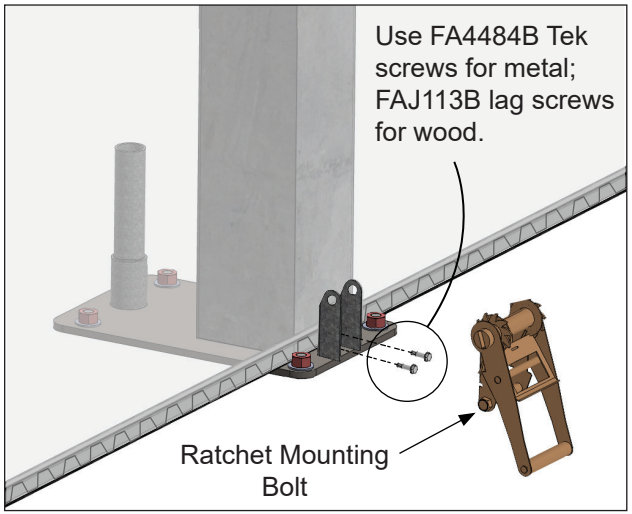

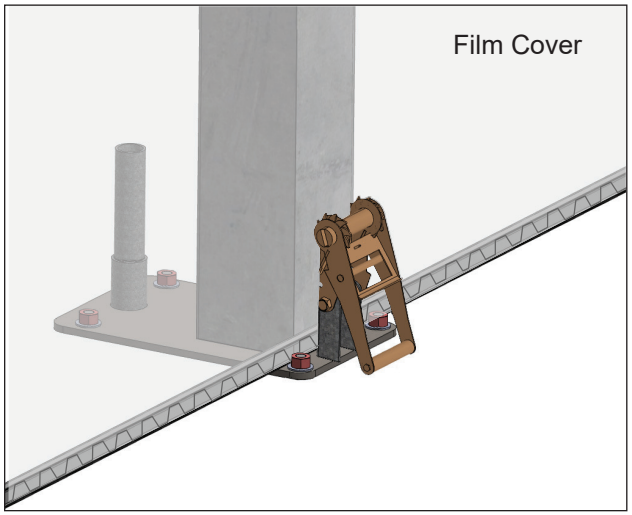

11

INSTALL ANTI-BILLOW STRAPS & RATCHETS

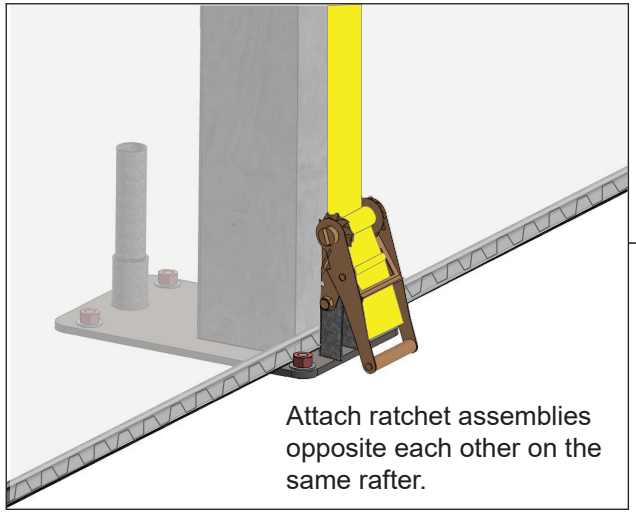

SIDE VIEWS SHOWN

48' LONG

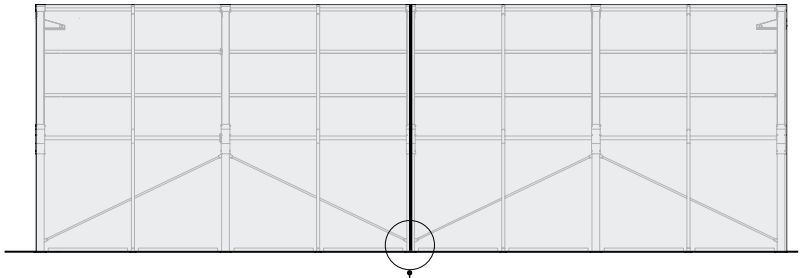

72' LONG

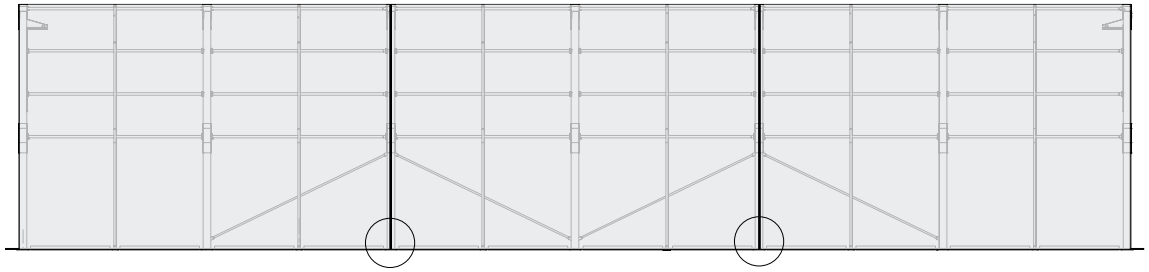

96' LONG

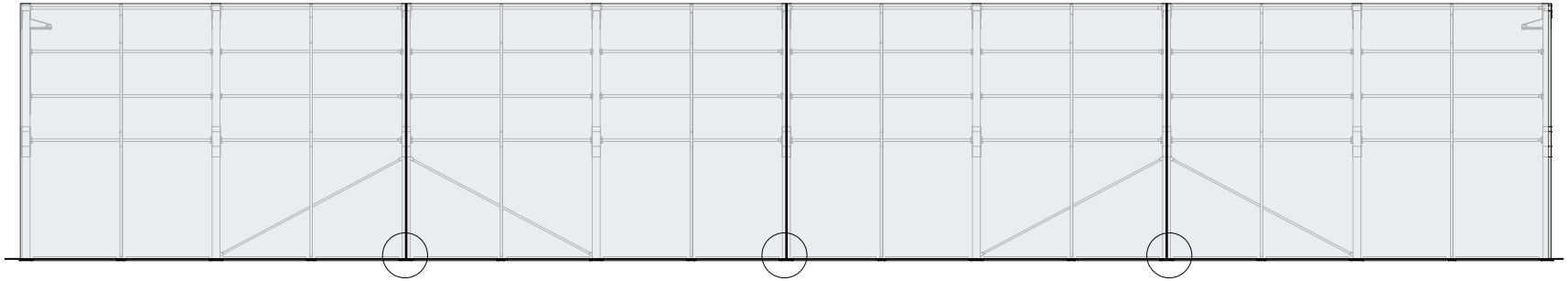

120' LONG

GROWspan™

32' Wide Frame

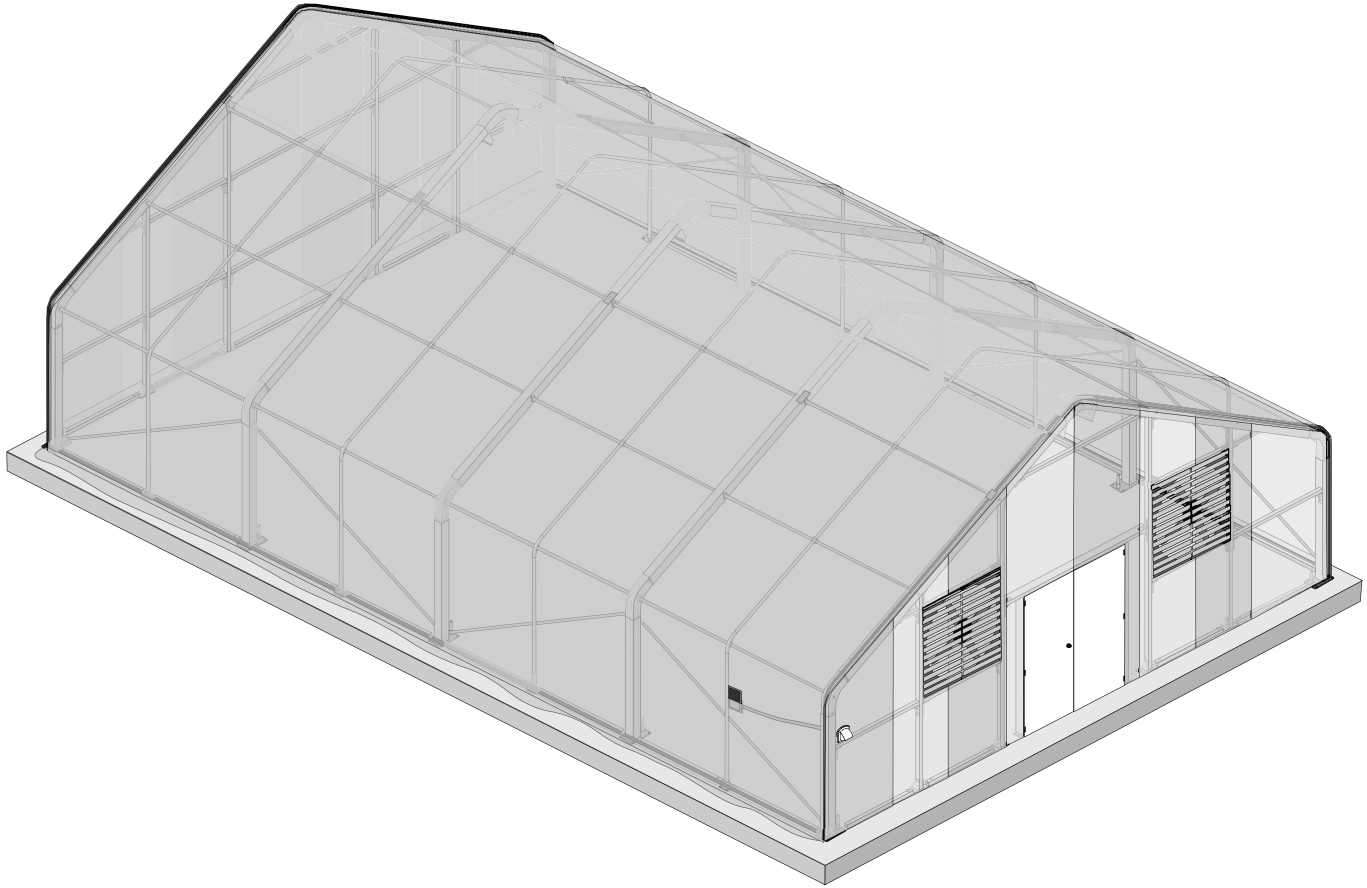

Frame length and design of actual building may differ from what is shown.

Main Rafter Profiles (Styles A & B)

GREEN

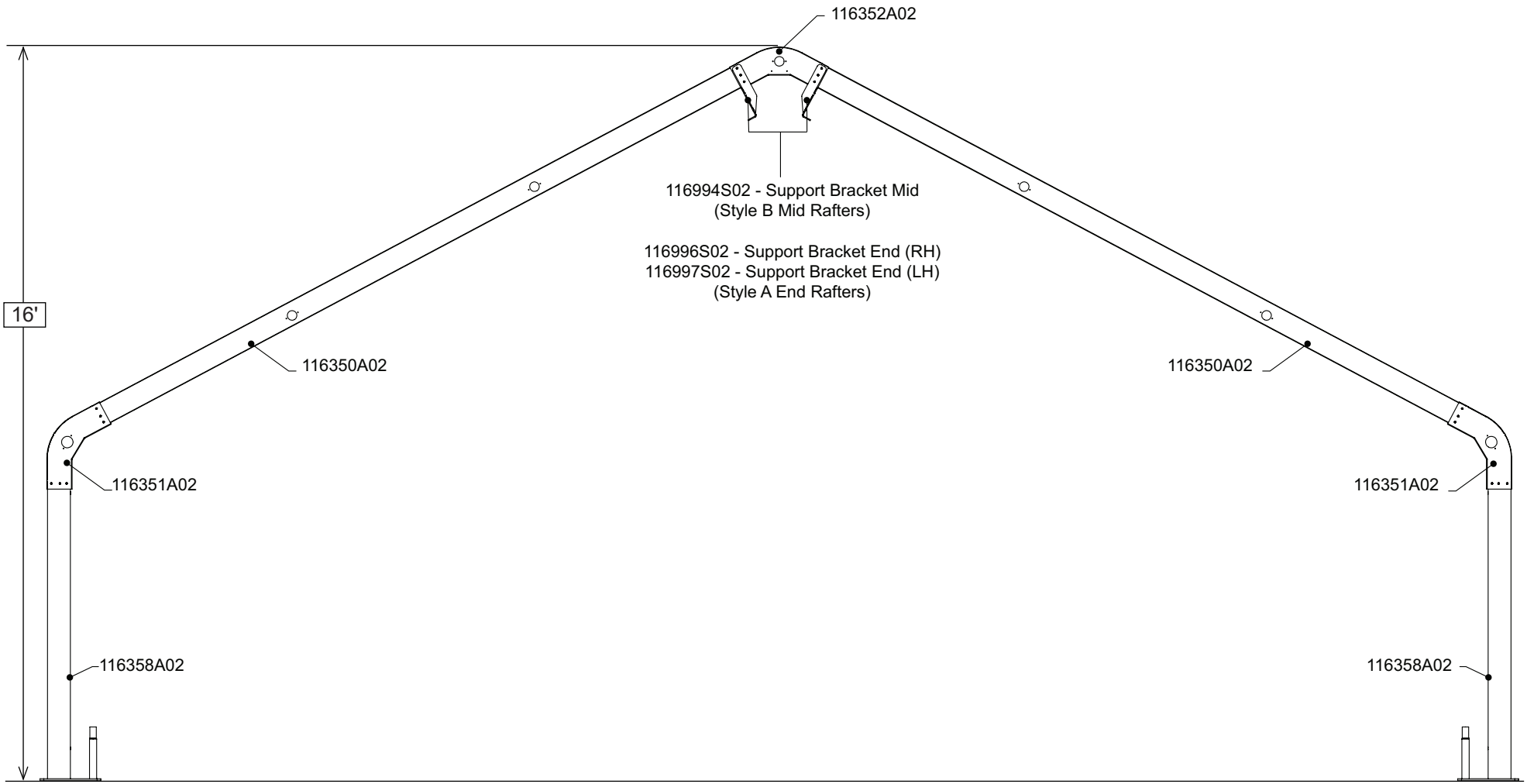

Mid Rafter Profile (Style C)

GREEN

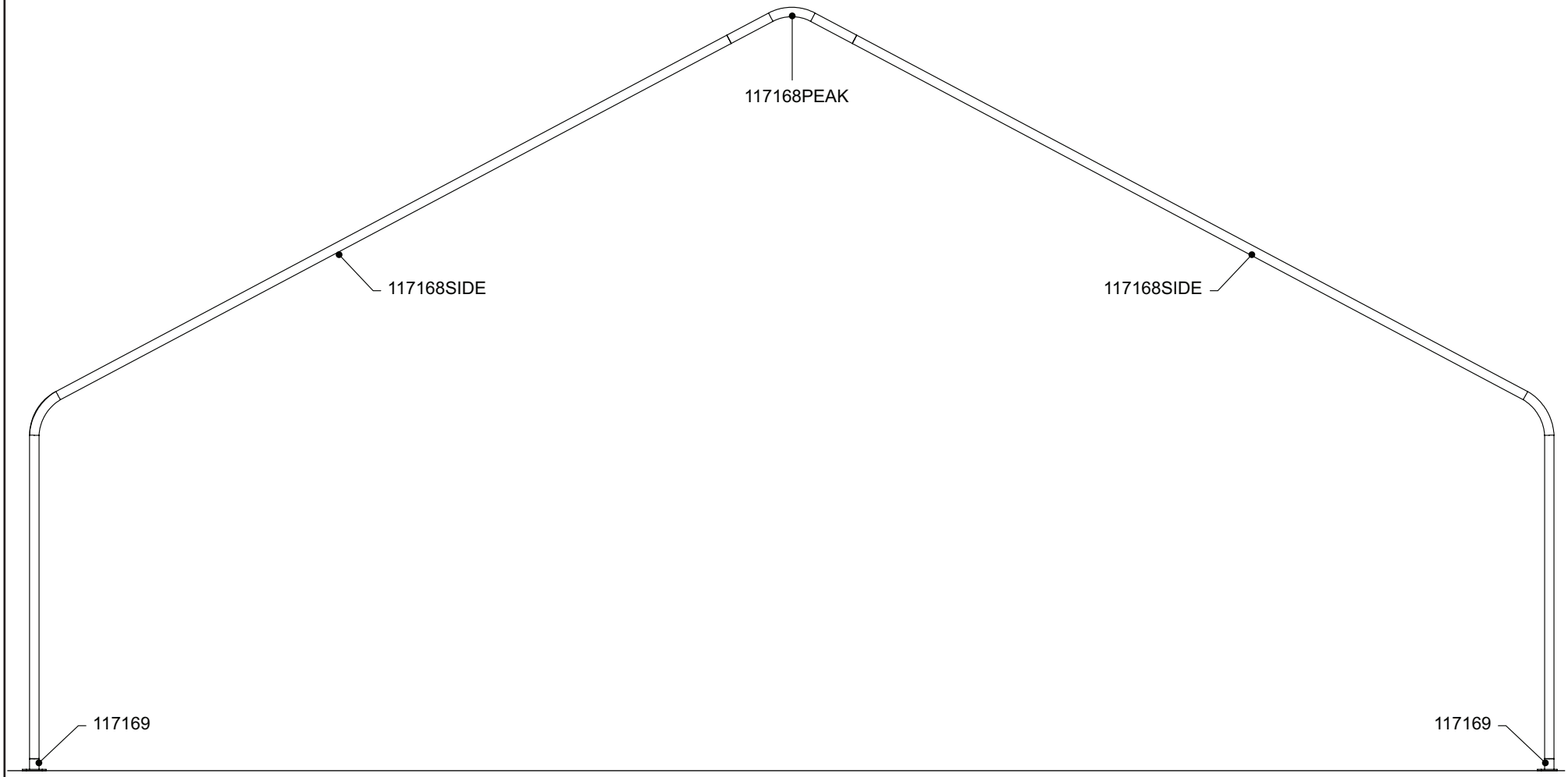

Side Profile - 48' Long

GREEN

RAFTER STYLES:

- **Style A rafters (main rafter - end)** positioned at each frame end.
- **Style B rafters (main rafter - mid)** spaced at 12' on-center between Style A rafters.
- **Style C rafters (mid rafter)** spaced at 6' on-center between main rafters.

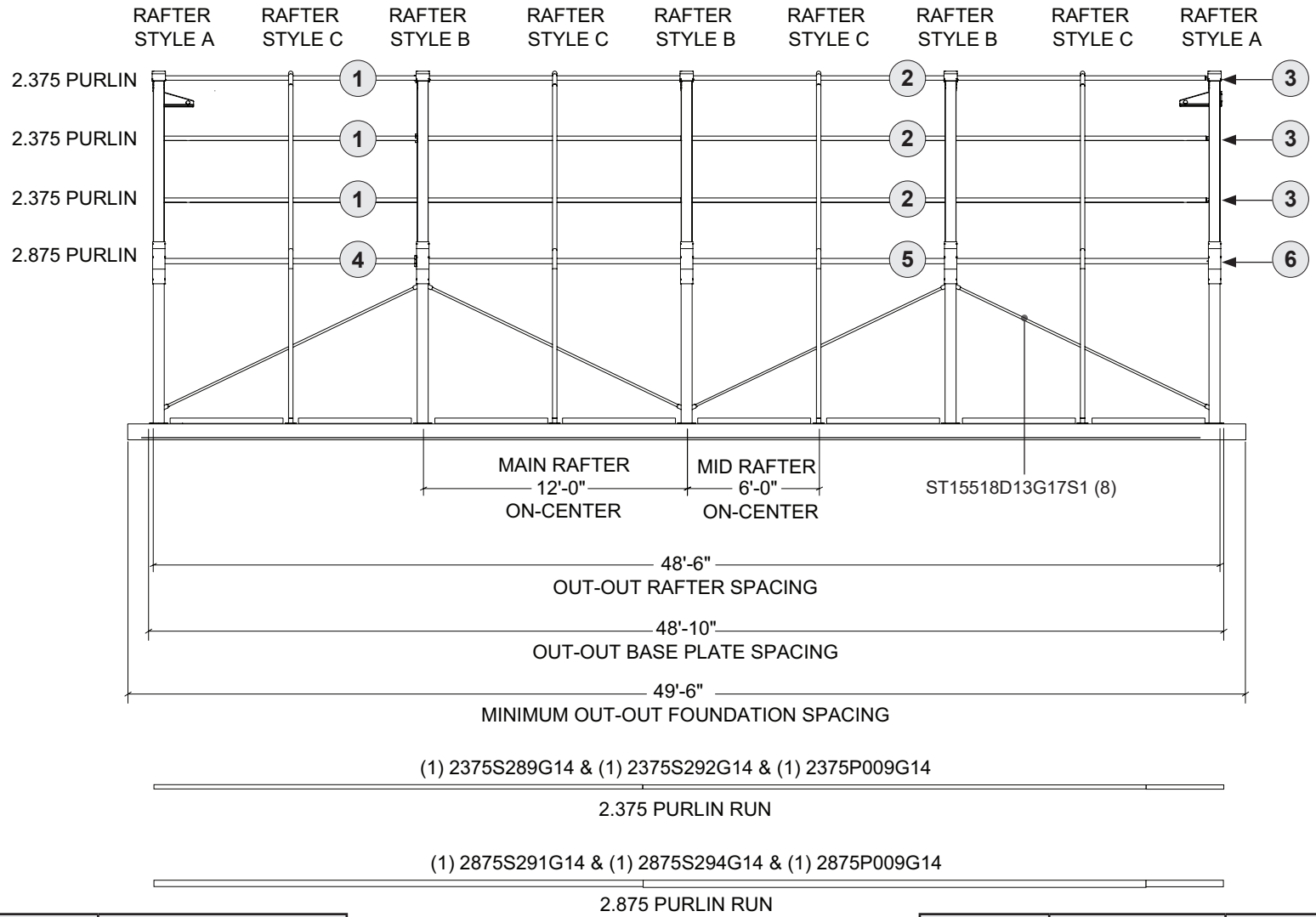

CALLOUT	PIPE ID #	QUANTITY PER RUN
1	2375S289G14	1
2	2375S292G14	1
3	2375P009G14	1

CALLOUT	PIPE ID #	QUANTITY PER RUN
4	2875S291G14	1
5	2875S294G14	1
6	2875P009G14	1

Side Profile - 72' Long

GREEN

RAFTER STYLES:

- **Style A rafters (main rafter - end)** positioned at each frame end.
- **Style B rafters (main rafter - mid)** spaced at 12' on-center between Style A rafters.
- **Style C rafters (mid rafter)** spaced at 6' on-center between main rafters.

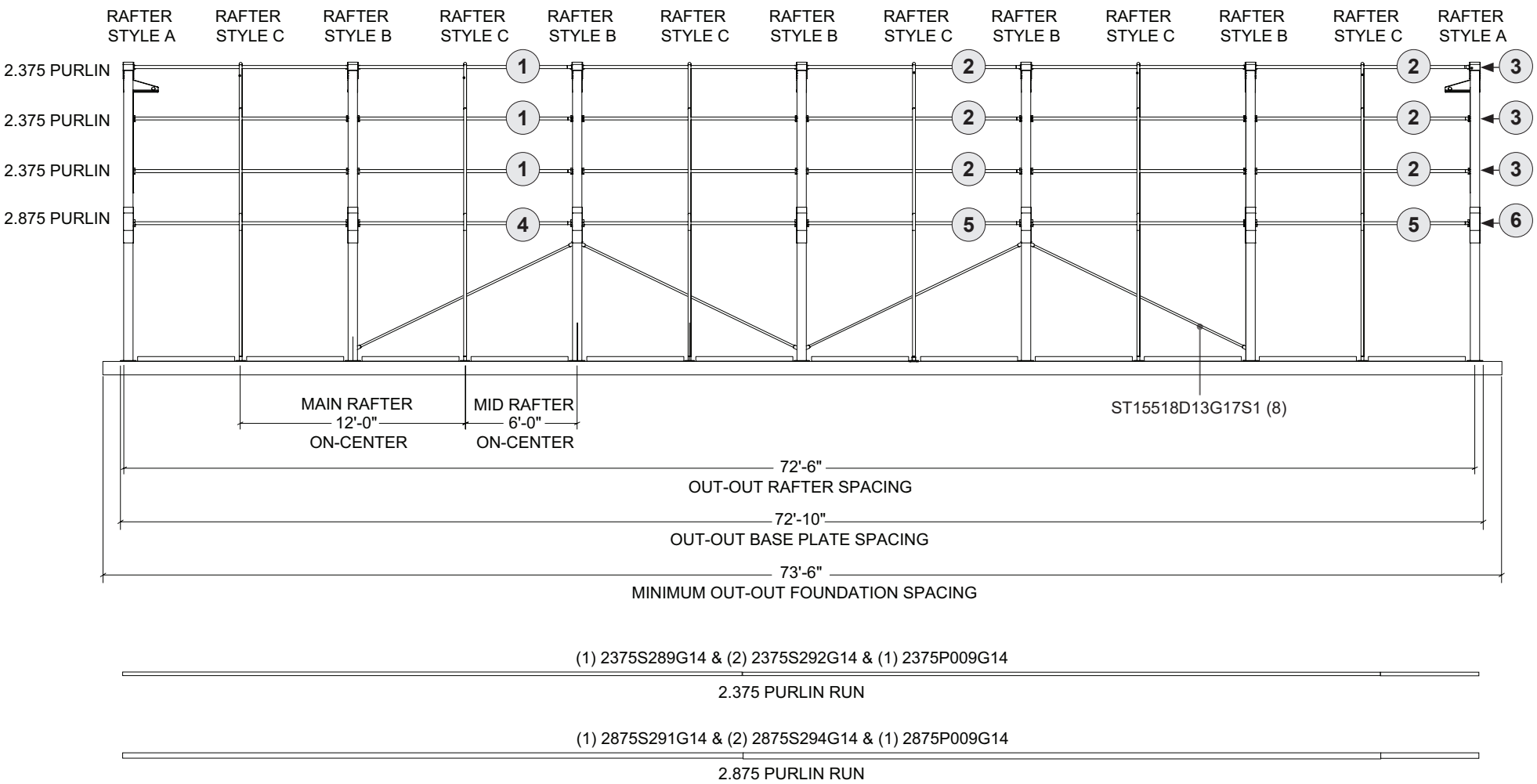

CALLOUT	PIPE ID #	QUANTITY PER RUN
1	2375S289G14	1
2	2375S292G14	2
3	2375P009G14	1

CALLOUT	PIPE ID #	QUANTITY PER RUN
4	2875S291G14	1
5	2875S294G14	2
6	2875P009G14	1

Side Profile - 96' Long

GREEN

RAFTER STYLES:

- **Style A rafters (main rafter - end)** positioned at each frame end.
- **Style B rafters (main rafter - mid)** spaced at 12' on-center between Style A rafters.
- **Style C rafters (mid rafter)** spaced at 6' on-center between main rafters.

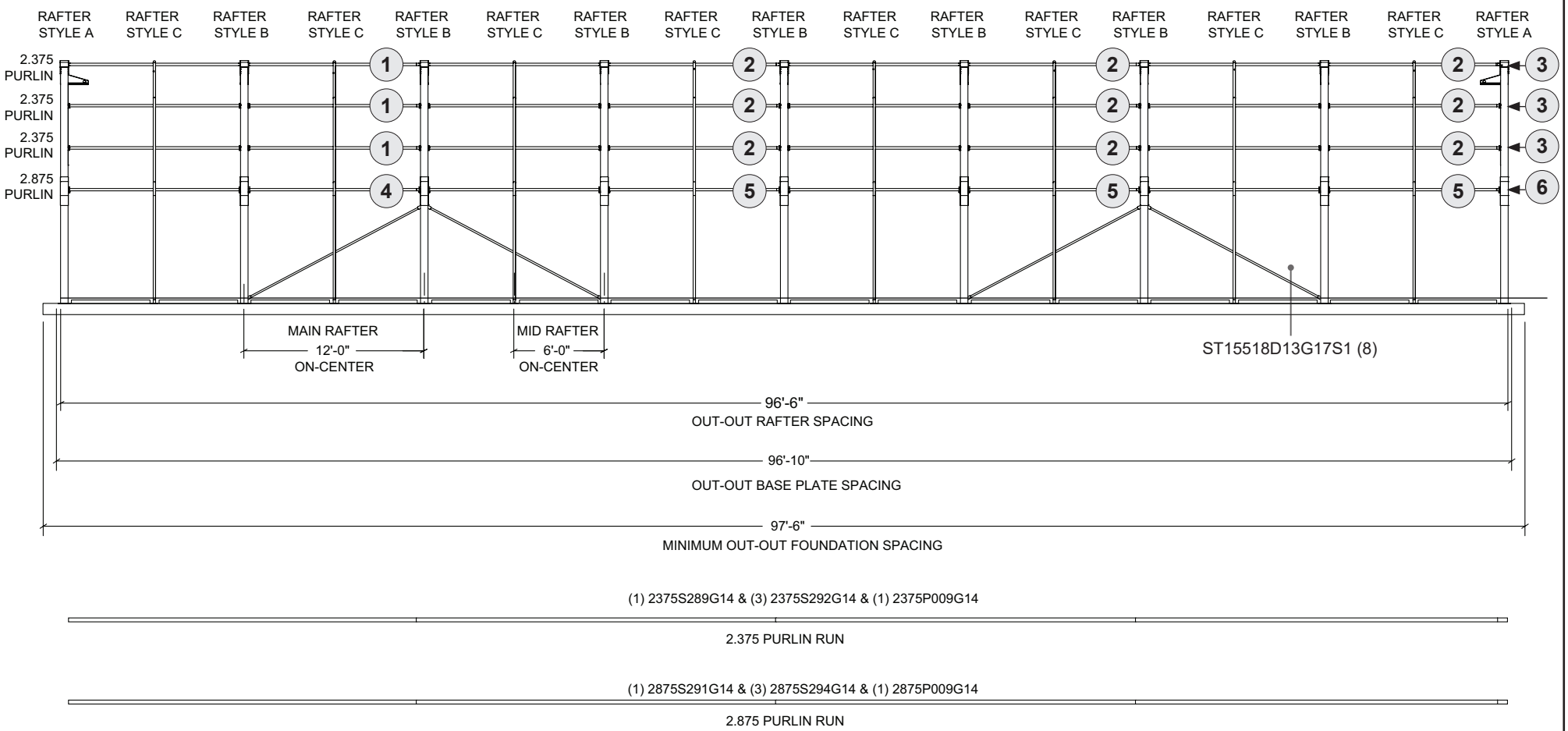

CALLOUT	PIPE ID #	QUANTITY PER RUN
1	2375S289G14	1
2	2375S292G14	3
3	2375P009G14	1

CALLOUT	PIPE ID #	QUANTITY PER RUN
4	2875S291G14	1
5	2875S294G14	3
6	2875P009G14	1

Side Profile - 120' Long

GREEN

RAFTER STYLES:

- **Style A rafters (main rafter - end)** positioned at each frame end.
- **Style B rafters (main rafter - mid)** spaced at 12' on-center between Style A rafters.
- **Style C rafters (mid rafter)** spaced at 6' on-center between main rafters.

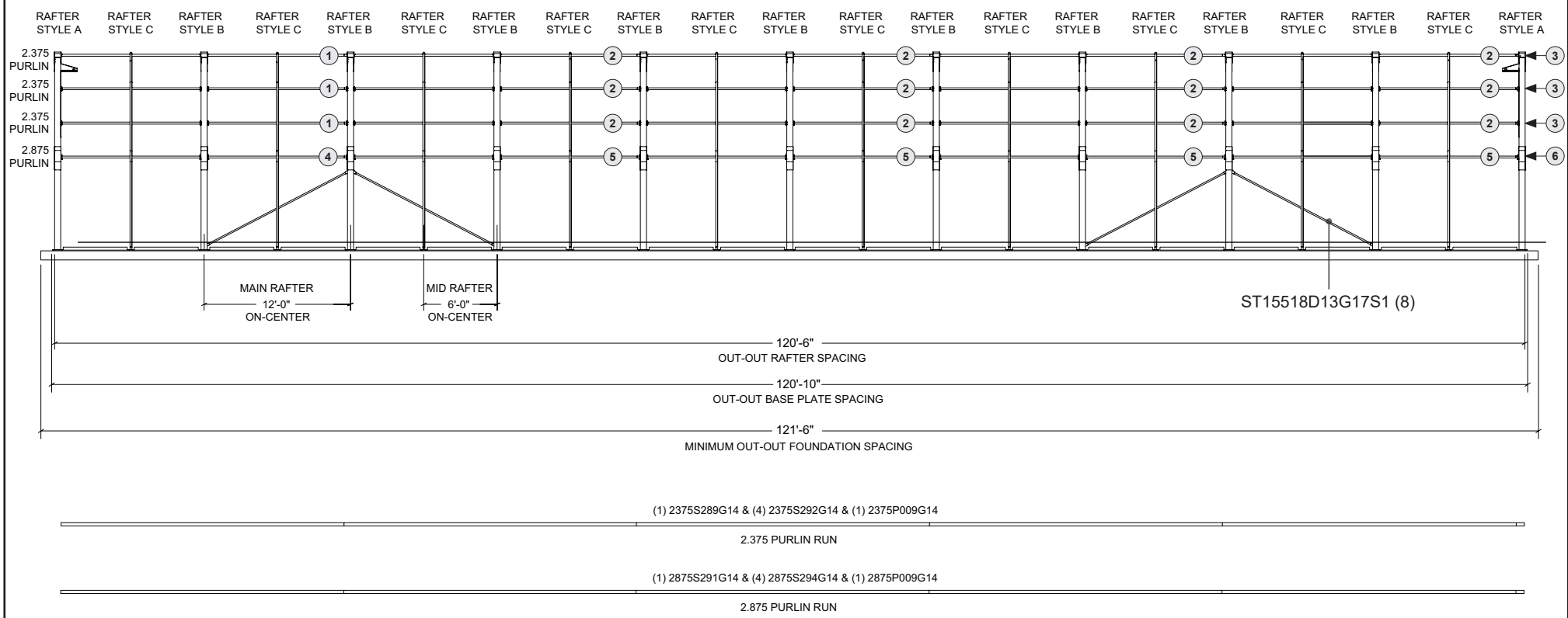

CALLOUT	PIPE ID #	QUANTITY PER RUN
1	2375S289G14	1
2	2375S292G14	4
3	2375P009G14	1

CALLOUT	PIPE ID #	QUANTITY PER RUN
4	2875S291G14	1
5	2875S294G14	4
6	2875P009G14	1

Frame Connections (1-6)

GREEN

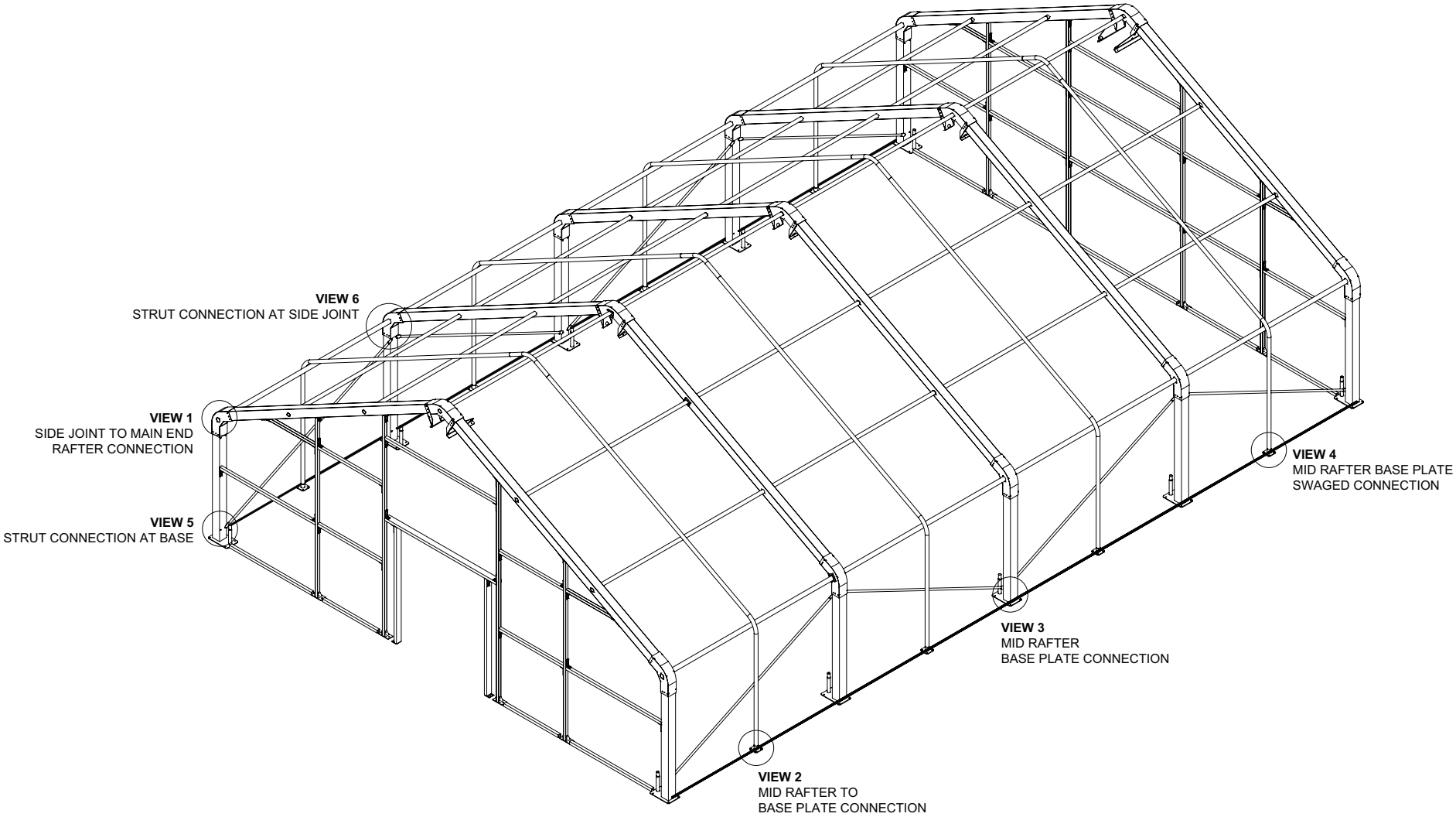

Frame Connection Details (1-6)

GREEN

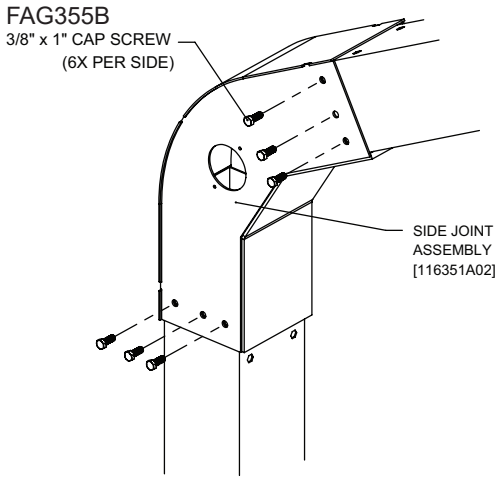

VIEW 1
SIDE JOINT TO MAIN END RAFTER CONNECTION

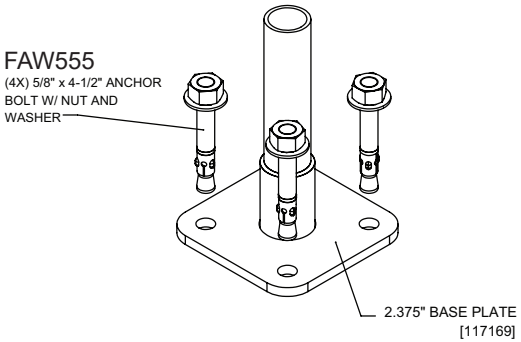

VIEW 2
MID RAFTER TO BASE PLATE CONNECTION

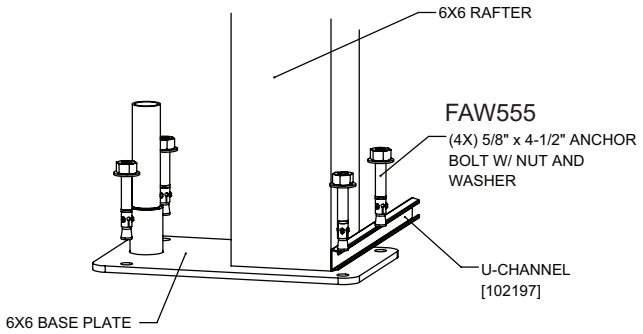

VIEW 3
MID RAFTER BASE PLATE CONNECTION

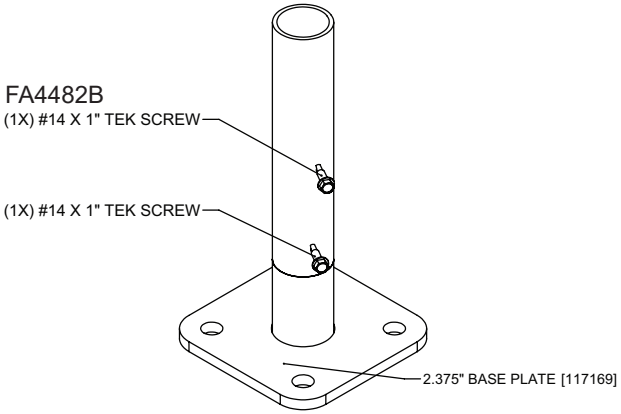

VIEW 4
MID RAFTER BASE PLATE SWAGED CONNECTION

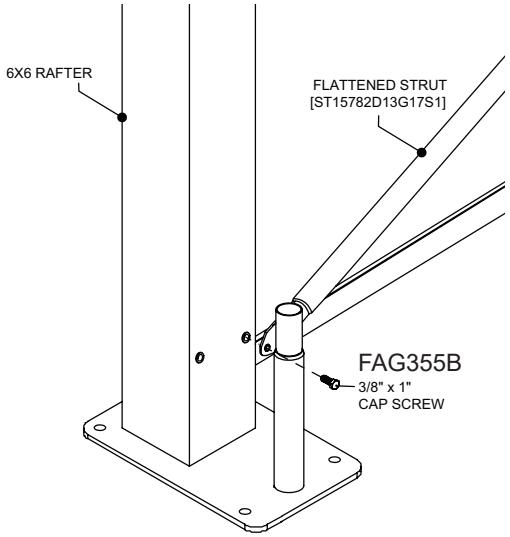

VIEW 5
STRUT CONNECTION AT BASE

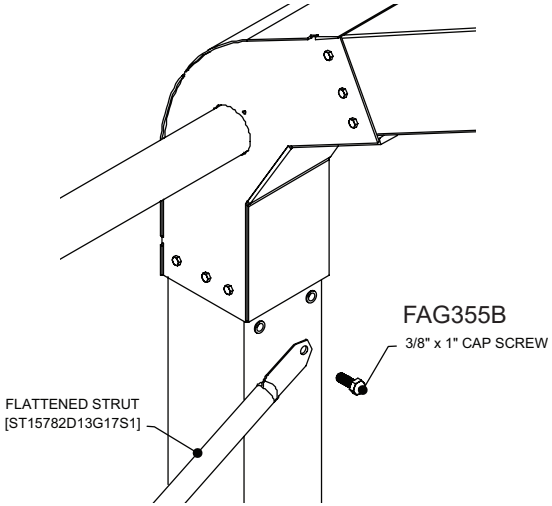

VIEW 6
STRUT CONNECTION AT SIDE JOINT

Frame Connections (7-10)

GREEN

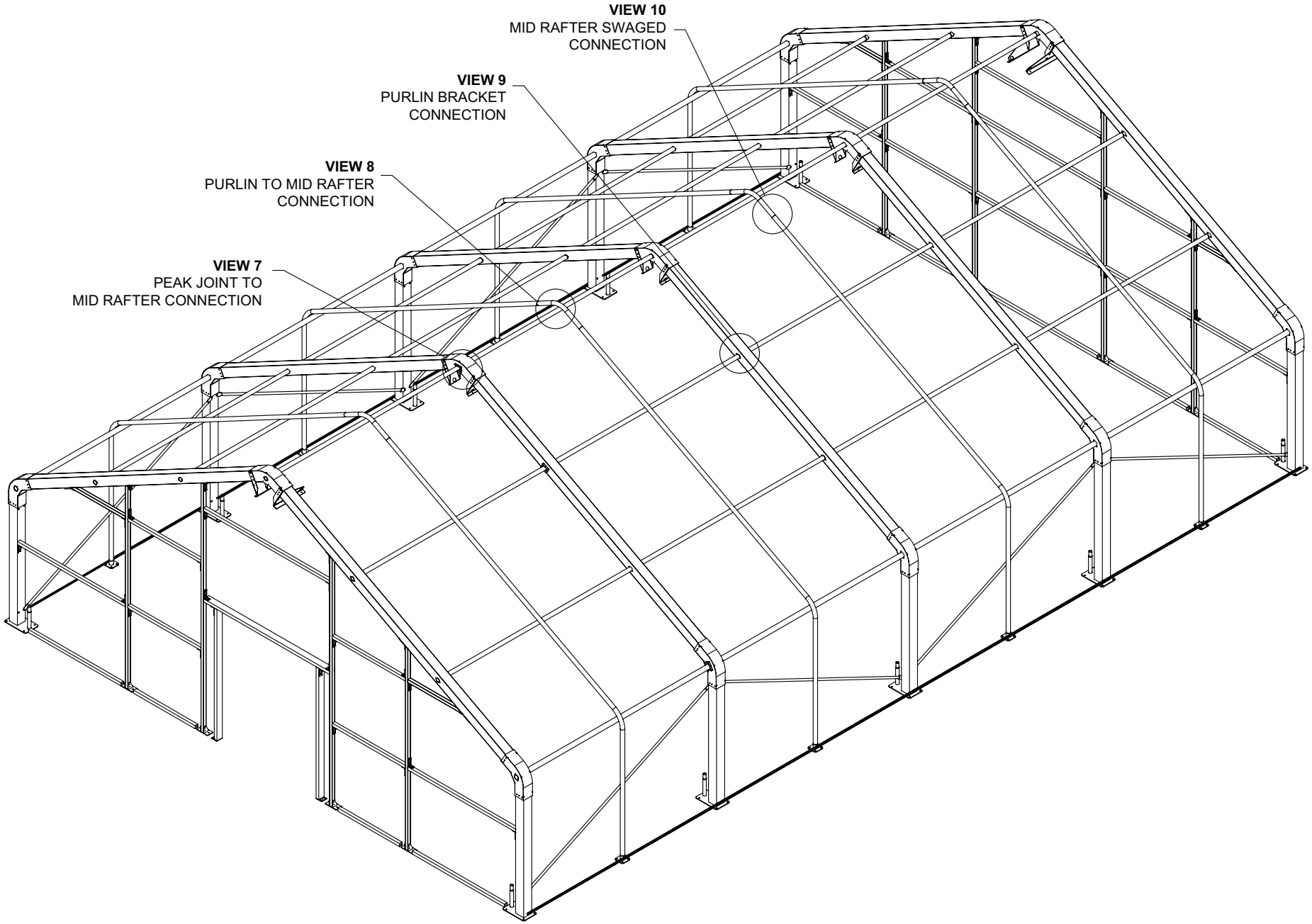

Frame Connection Details (7-10)

GREEN

*NOTE: END PEAK JOINTS WILL USE 116996S02 & 116997S02.

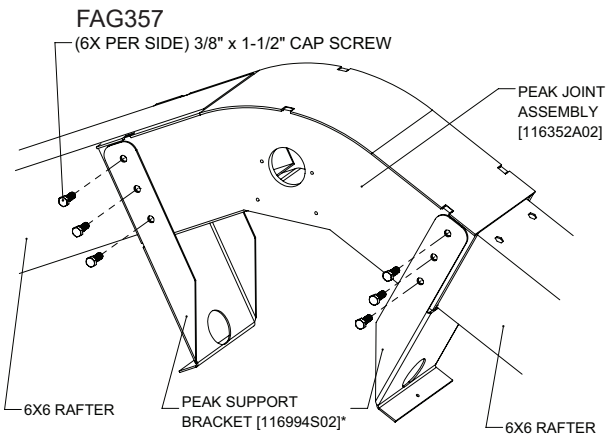

VIEW 7
PEAK JOINT TO MID RAFTER CONNECTION

*NOTE: 2.875" PURLIN PIPE AT CORNERS WILL USE CROSS CONNECTOR [117176].
DRAWING NOT TO SCALE FOR THIS DETAIL.

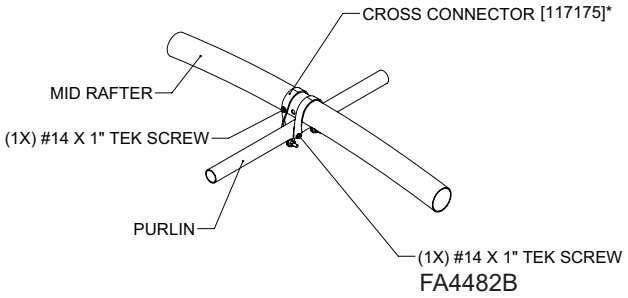

VIEW 8
PURLIN TO MID RAFTER CONNECTION

*NOTE: TEK SCREWS WILL DRILL INTO THE RAFTER SECTION AND INTO THE PURLINS THROUGH THE PURLIN PIPE CONNECTOR.

PURLIN PIPE CONNECTOR (116359S03) IS USED FOR PURLIN PIPE AT CORNERS.

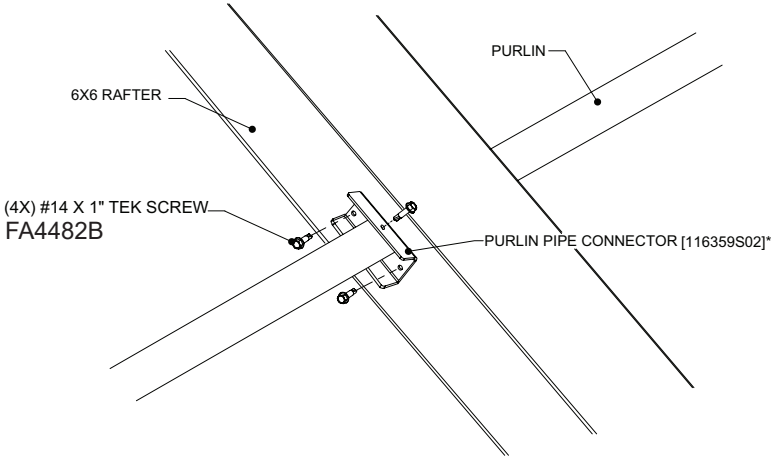

VIEW 9
PURLIN BRACKET CONNECTION

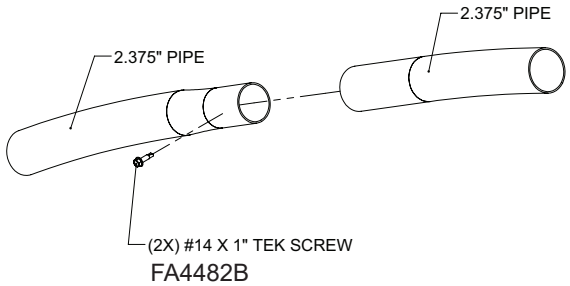

VIEW 10
MID RAFTER SWAGED CONNECTION

End Wall Frame - Double Door & 42" Exhaust Fans

Cut tubes to the required length and secure using QH1330 brackets and Tek screws. Install screws in a location that will not interfere with the installation of the door assembly or end wall cladding if equipped. If you do not need to install fans, the additional framing within the fan openings is not required. ***Diagram below is framed for the 42" fans; rough opening is 45-3/8" square. Confirm dimensions with the documentation included with the actual fans. IF YOUR BUILDING IS SECURED TO PIERS OR HELICAL ANCHORS SEE THE DIAGRAMS ON PAGES 51 & 52.***

NOTE: Fans and evaporative cooling system are included with LE and SE models only. ***ALWAYS MEASURE ACTUAL COMPONENTS BEFORE FRAMING THE ROUGH OPENING(S).***

CALLOUT	2" x 2" TUBE ID#	LENGTH	QUANTITY
1	S20P04093G14A1	40 15/16"	2
2	S20P13156G14A2	131 9/16"	2
3	S20P16156G14A2	161 9/16"	2

ROUGH DOOR OPENING: Consult the documents included with the actual door to frame the rough opening. If documents are not present, measure the actual door and frame the opening as needed.

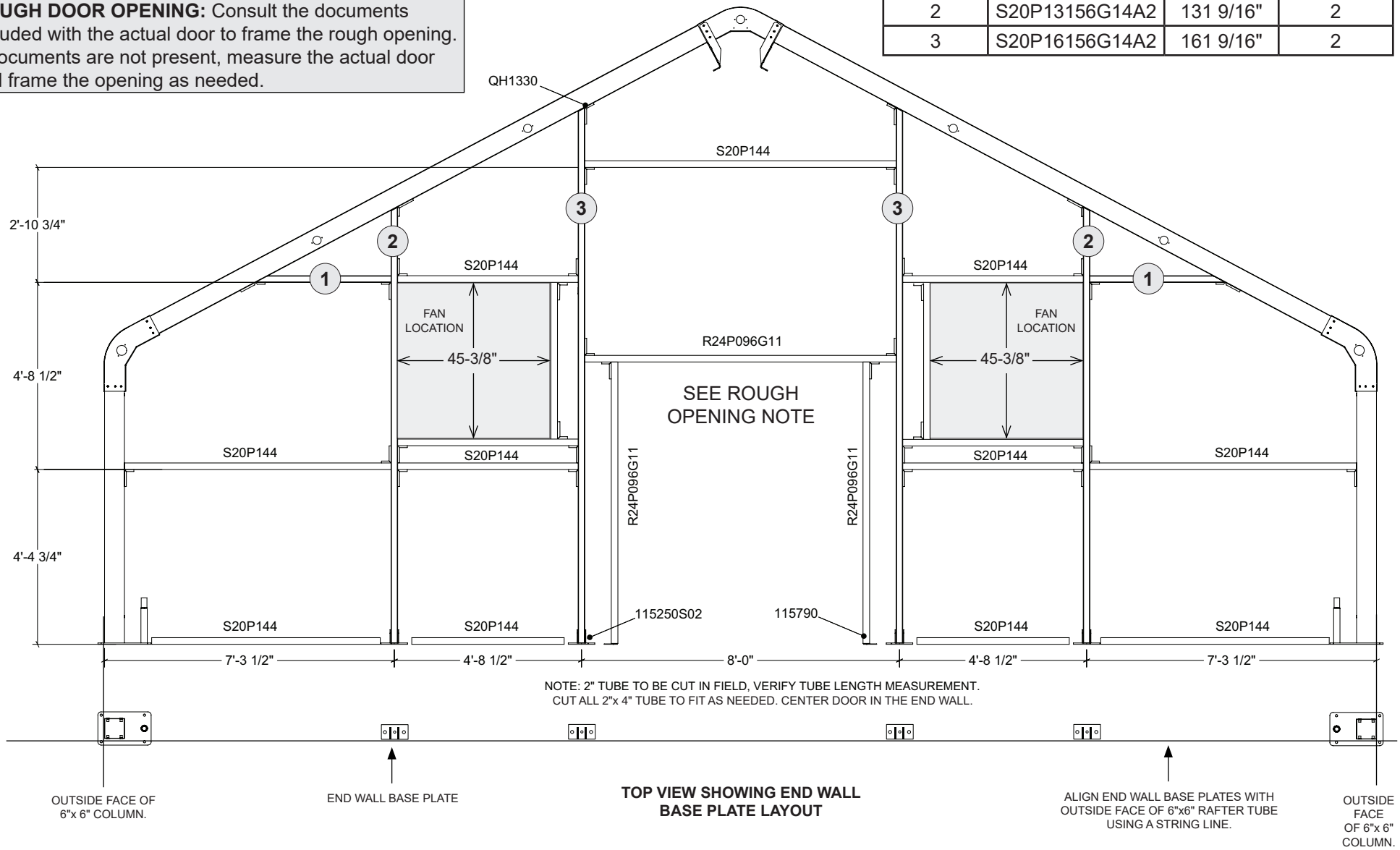

TOP VIEW SHOWING END WALL BASE PLATE LAYOUT

End Wall Frame - Double Door & 53" Exhaust Fans

GREEN

Cut tubes to the required length and secure using QH1330 brackets and Tek screws. Install screws in a location that will not interfere with the installation of the door assembly or end wall cladding if equipped. ***Diagram below is framed for the 53" fans; rough opening is 54-1/2" square. Confirm dimensions with the documentation included with the actual fans. IF YOUR BUILDING IS SECURED TO PIERS OR HELICAL ANCHORS SEE THE DIAGRAMS ON PAGES 51 & 52.***

NOTE: Fans and evaporative cooling system are included with LE and SE models only. ***ALWAYS MEASURE ACTUAL COMPONENTS BEFORE FRAMING THE ROUGH OPENING(S).***

CALLOUT	2" x 2" TUBE ID#	LENGTH	QUANTITY
1	S20P04093G14A1	40 15/16"	2
2	S20P13156G14A2	131 9/16"	2
3	S20P16156G14A2	161 9/16"	2

ROUGH DOOR OPENING: Consult the documents included with the actual door to frame the rough opening. If documents are not present, measure the actual door and frame the opening as needed.

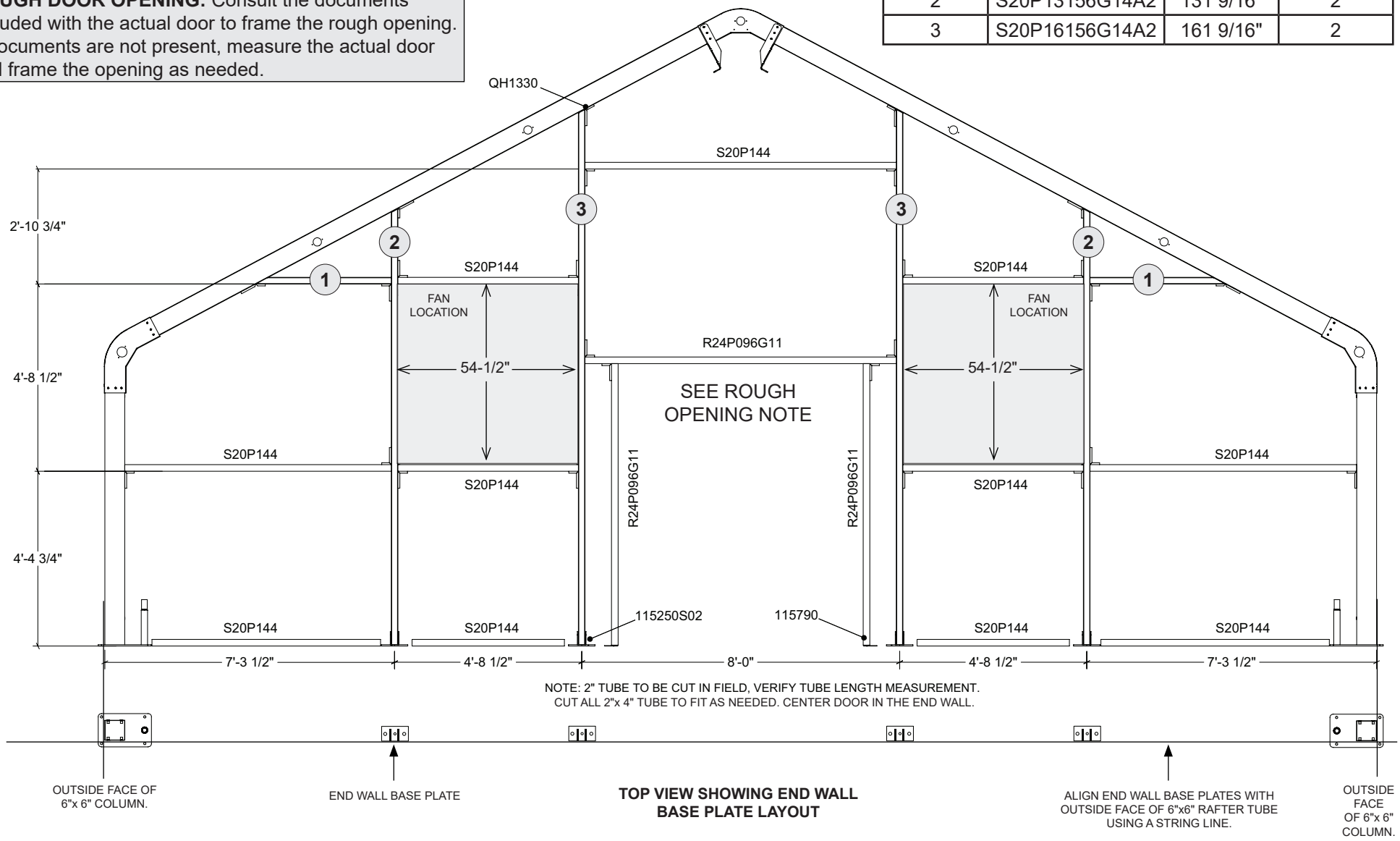

TOP VIEW SHOWING END WALL BASE PLATE LAYOUT

End Wall Frame – Solid

GREEN

NOTE: Cut tubes to the required length and secure using QH1330 brackets and Tek screws. Install screws in a location that will not interfere with the installation of the door assembly or end wall cladding if equipped. ***IF YOUR BUILDING IS SECURED TO PIERS OR HELICAL ANCHORS SEE THE DIAGRAMS ON PAGES 51 & 52.***

NOTE: Fans and evaporative cooling system are included with LE and SE models only. ALWAYS MEASURE ACTUAL COMPONENTS BEFORE FRAMING THE ROUGH OPENING(S).

CALLOUT	2" x 2" TUBE ID#	LENGTH	QUANTITY
1	S20P02681G14A1	26 13/16"	2
2	S20P12568G14A2	125 11/16"	2
3	S20P16156G14A2	161 9/16"	2

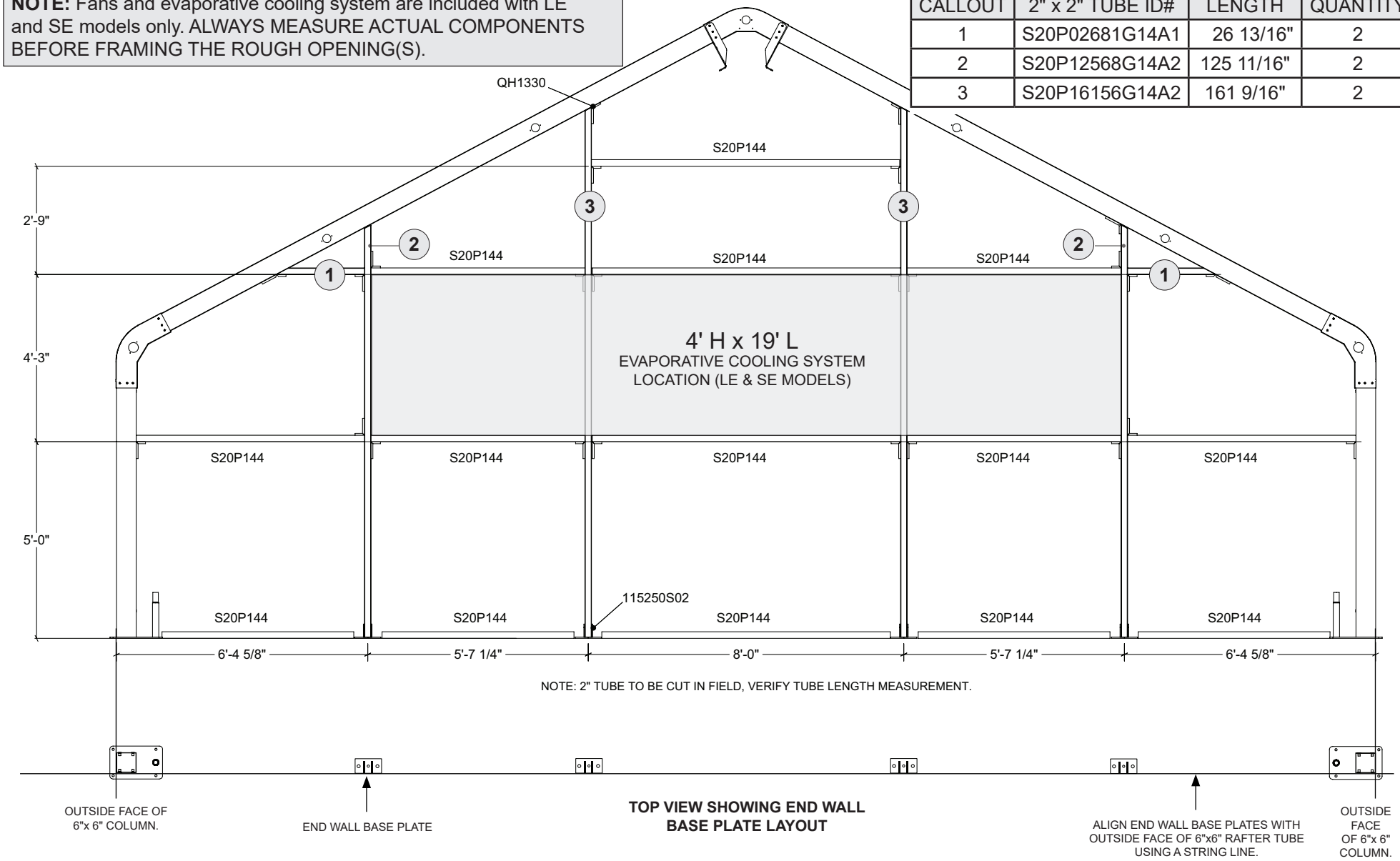

TOP VIEW SHOWING END WALL BASE PLATE LAYOUT

End Wall Frame – No Concrete Slab Foundation – Door End

For buildings without a perimeter concrete foundation or floor such as those installed on piers or helicals, the lower 2" x 2" end frame tube is secured approximately 6" above the finished grade to provide a place to secure the lower end of the cladding. ***End wall with 53" fans is shown. Actual end wall may include smaller fans. SEE PAGE 48 FOR 42" FAN ROUGH OPENING DIMENSIONS. DO NOT USE THIS DIAGRAM IF YOUR BUILDING IS SECURED TO A CONCRETE SLAB FOUNDATION.***

GREEN

NOTE: Fans and evaporative cooling system are included with LE and SE models only. ***ALWAYS MEASURE ACTUAL COMPONENTS BEFORE FRAMING THE ROUGH OPENING(S).***

ROUGH DOOR OPENING: Consult the documents included with the actual door to frame the rough opening. If documents are not present, measure the actual door and frame the opening as needed.

CALLOUT	2" x 2" TUBE ID#	LENGTH	QUANTITY
1	S20P04093G14A1	40 15/16"	2
2	S20P13156G14A2	131 9/16"	2
3	S20P16156G14A2	161 9/16"	2

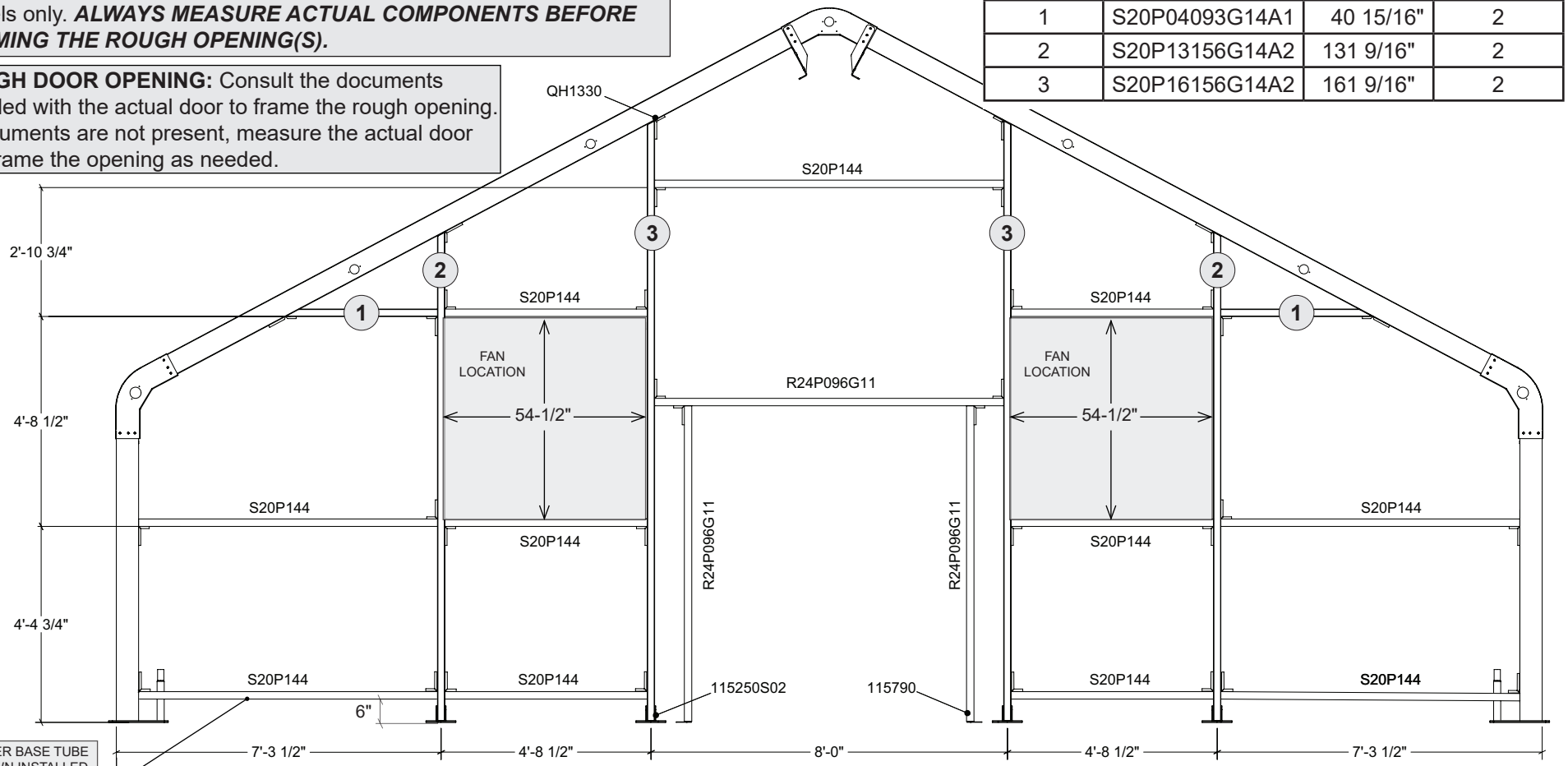

LOWER BASE TUBE SHOWN INSTALLED **6" ABOVE** GROUND LEVEL WHEN BUILDING IS INSTALLED ON PIERS OR HELICAL ANCHORS.

NOTE: 2" TUBE TO BE CUT IN FIELD, VERIFY TUBE LENGTH MEASUREMENT. CUT ALL 2"x 4" TUBE TO FIT AS NEEDED. CENTER DOOR IN THE END WALL.

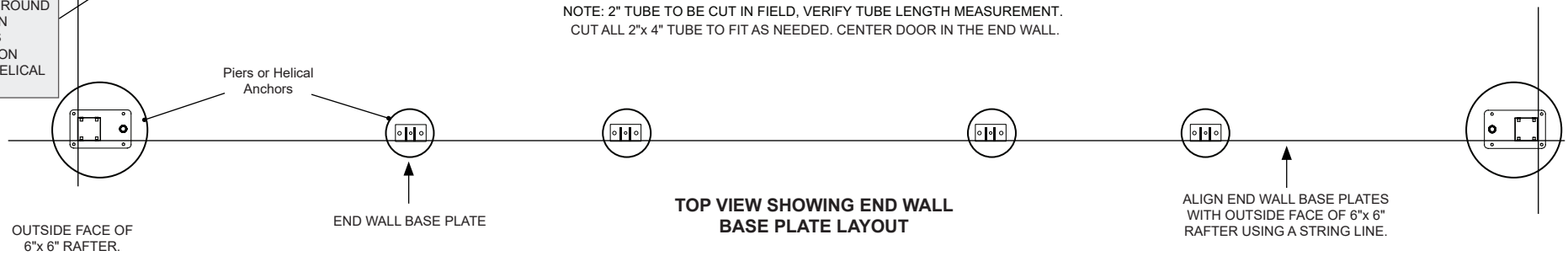

TOP VIEW SHOWING END WALL BASE PLATE LAYOUT

End Wall Frame – No Concrete Slab Foundation – Vent End

For buildings without a perimeter concrete foundation or floor such as those installed on piers or helicals, the lower 2" x 2" end frame tube is secured approximately 6" above the finished grade to provide a place to secure the lower end of the cladding. ***End wall with vent is shown. DO NOT USE THIS DIAGRAM IF YOUR BUILDING IS SECURED TO A CONCRETE SLAB FOUNDATION.***

GREEN

NOTE: Fans and evaporative cooling system are included with LE and SE models only. ALWAYS MEASURE ACTUAL COMPONENTS BEFORE FRAMING THE ROUGH OPENING(S).

CALLOUT	2" x 2" TUBE ID#	LENGTH	QUANTITY
1	S20P02681G14A1	26 13/16"	2
2	S20P12568G14A2	125 11/16"	2
3	S20P16156G14A2	161 9/16"	2

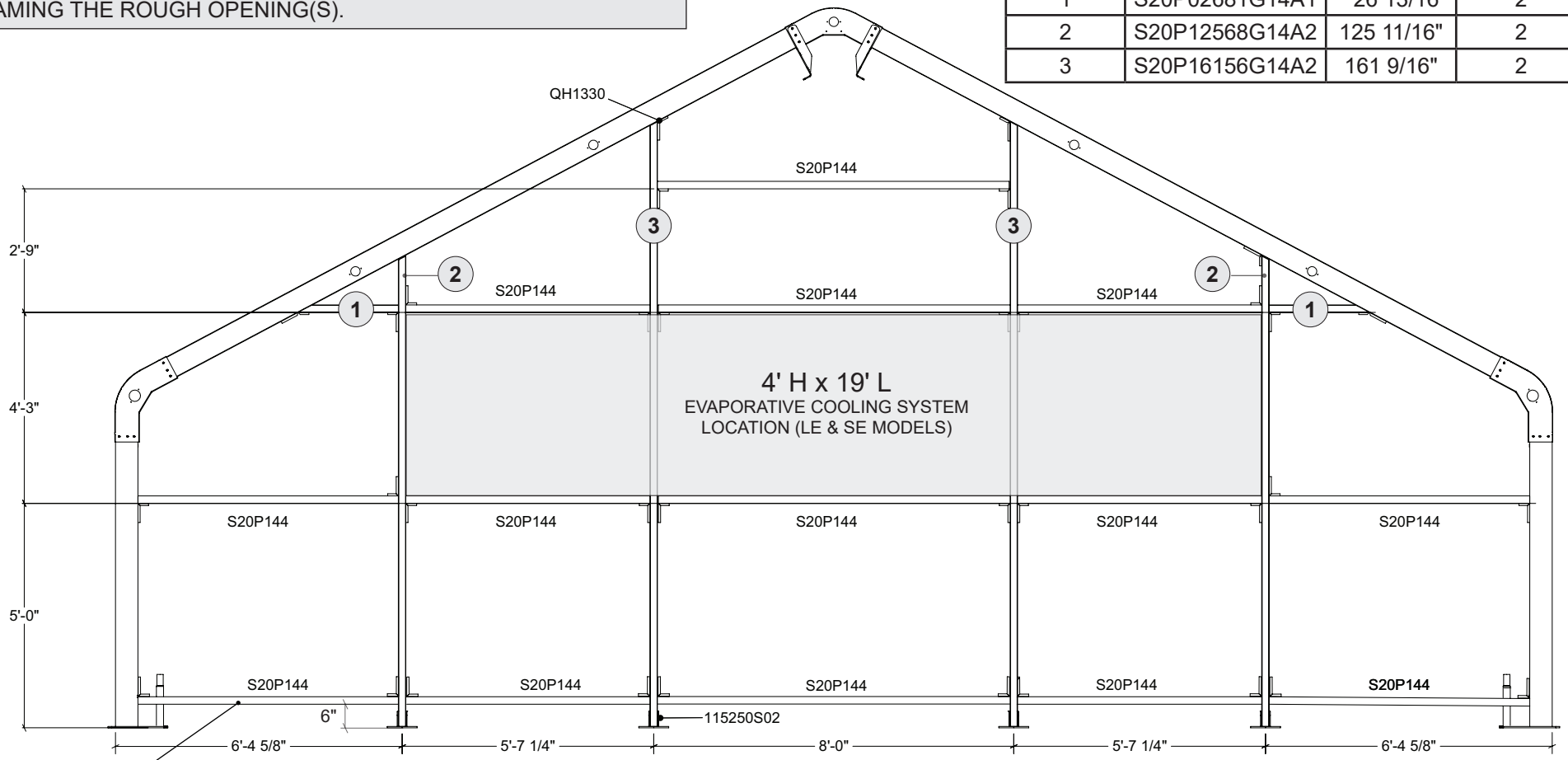

NOTE: 2" TUBE TO BE CUT IN FIELD, VERIFY TUBE LENGTH MEASUREMENT.

LOWER BASE TUBE SHOWN INSTALLED **6" ABOVE** GROUND LEVEL WHEN BUILDING IS INSTALLED ON PIERS OR HELICAL ANCHORS.

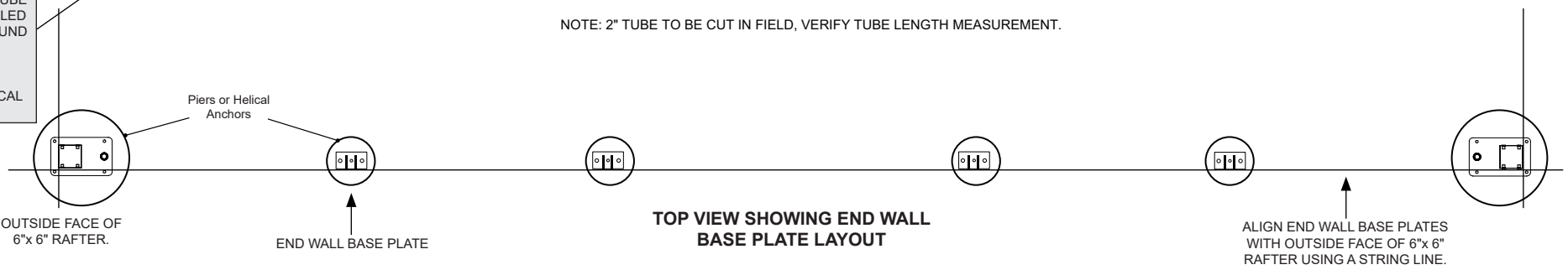

TOP VIEW SHOWING END WALL BASE PLATE LAYOUT

Film Connection & Connection Details

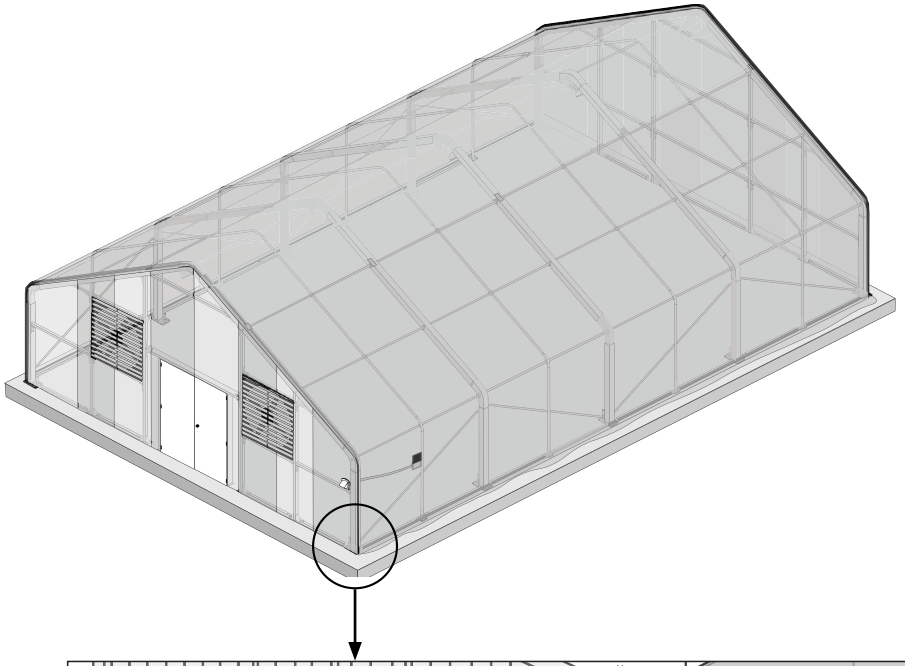

BASIC FILM INSTALLATION — SEE SECTION 10 FOR DETAILS

1. Install first layer of IR/AC film and secure in u-channel and u-channel flashing using a single run of 102198A poly-coated spring. ***Install film according to instructions printed on film.***
2. Install air inflation system components.
3. Install second layer of film over the first and secure using a second run of 102198A poly-coated spring.

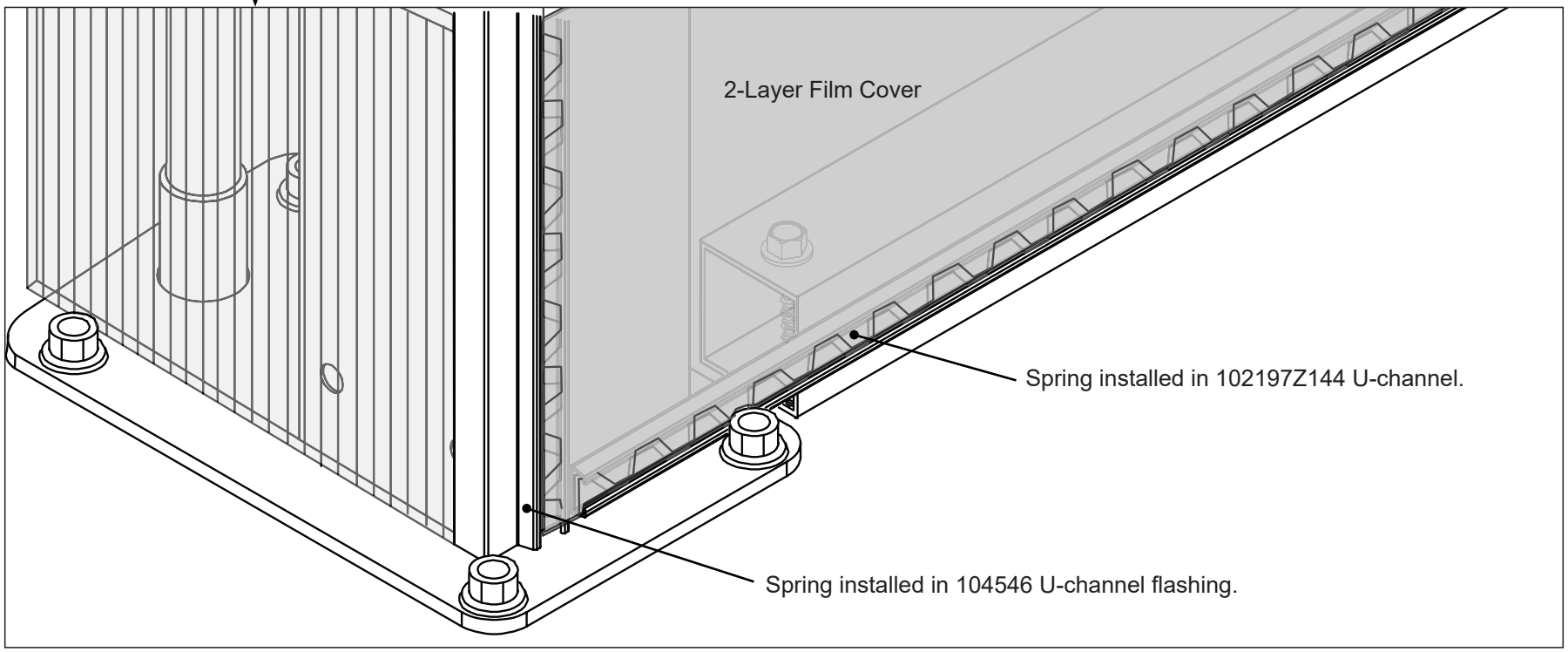

End Wall Connections

GREEN

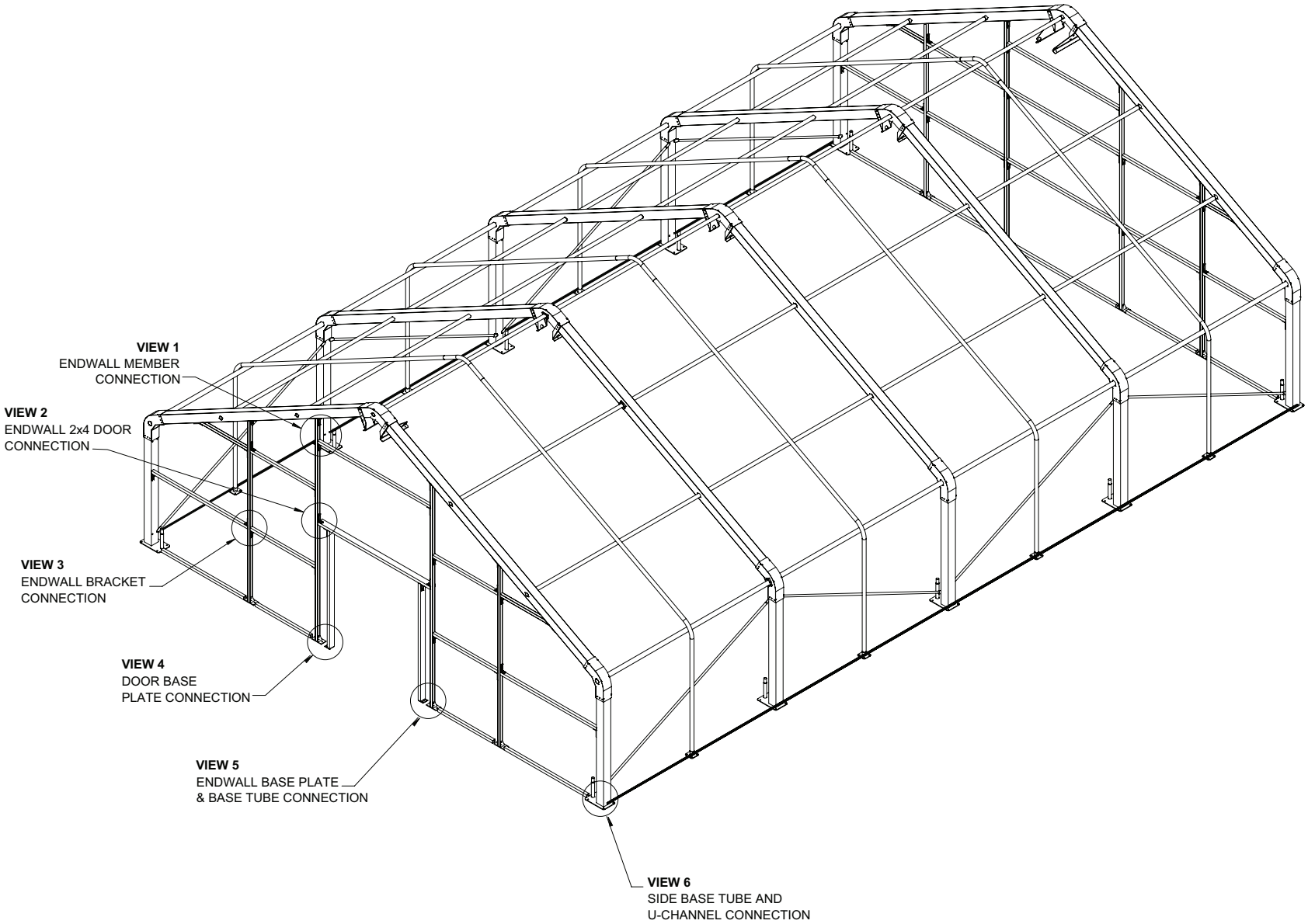

End Wall Connection Details (1-6)

GREEN

NOTE: USE TEK SCREWS (FA4482B) AND BRACKETS (QH1330) TO SECURE ENDWALL MEMBERS TO RAFTER SECTION. SEE VIEW 2 FOR REFERENCE.

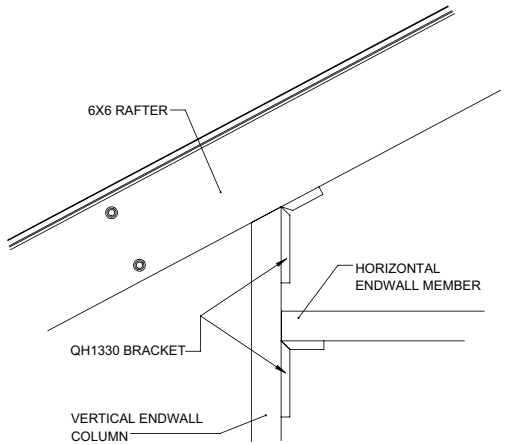

VIEW 1
ENDWALL MEMBER CONNECTION

NOTE: 2" X 4" TUBE TO BE FLUSH WITH OUTSIDE FACE OF ENDWALL 2" X 2" TUBES.

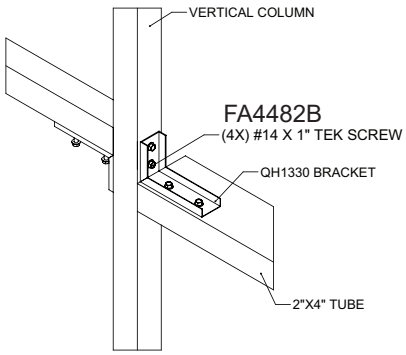

VIEW 2
ENDWALL 2x4 DOOR CONNECTION

NOTE: USE TEK SCREWS (FA4482B) AND BRACKETS (QH1330) TO SECURE ENDWALL MEMBERS TO RAFTER SECTION.

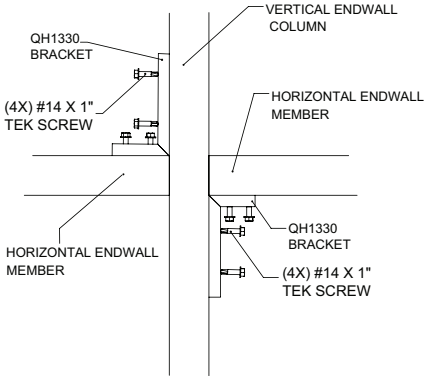

VIEW 3
ENDWALL BRACKET CONNECTION

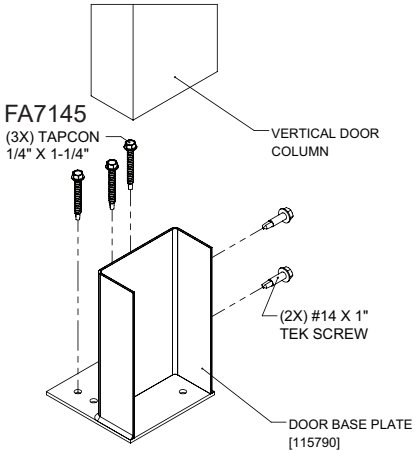

VIEW 4
DOOR BASE PLATE CONNECTION

NOTE: ENDWALL BASE PLATE WILL BE BOLTED INTO THE FOUNDATION WITH TWO ANCHORS BOLTS (FAW555).

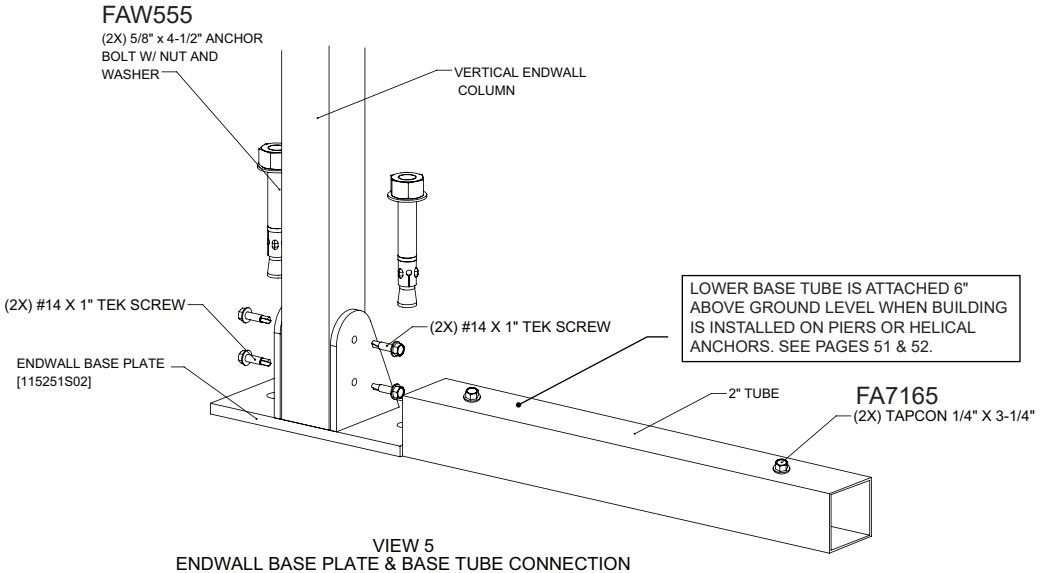

VIEW 5
ENDWALL BASE PLATE & BASE TUBE CONNECTION

NOTE: U-CHANNEL (102197) WILL BE USED TO SECURE THE FILM MATERIAL TO THE BUILDING ALONG THE SIDES. U-CHANNEL PROFILE (104546) IS USED TO SECURE FILM TO END RAFTERS.

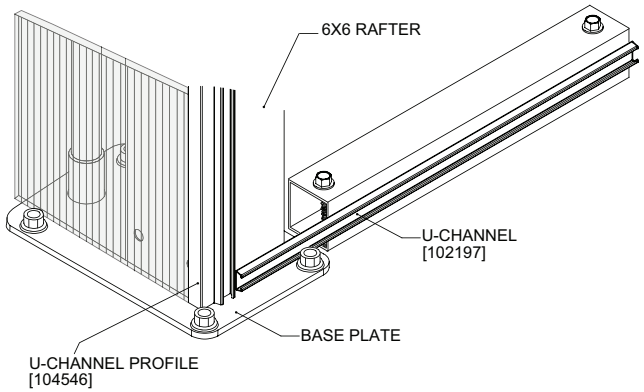

VIEW 6
SIDE BASE TUBE AND U-CHANNEL CONNECTION

BLUE

Base Plate Layout — Building Frame

GREEN

INSTALL BASE PLATES AT EACH CORNER FOR BLACKOUT SUPPORT RAFTERS.

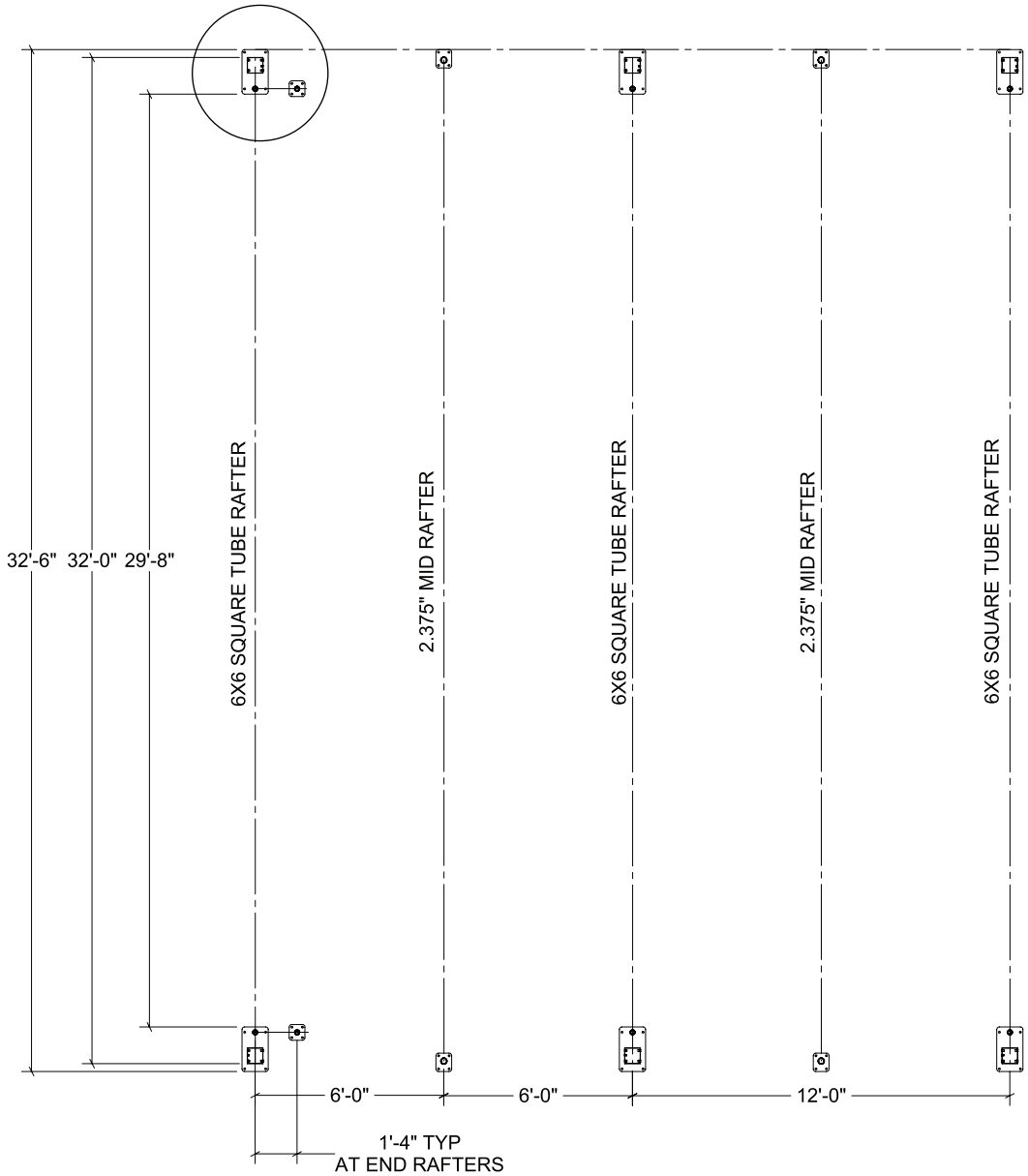

RAFTER TYPE	BASE PLATE SKU
6X6 SQUARE TUBE	116358A02
2.375" MID	117169
1.90 BLACKOUT SUPPORT RAFTER	116360A

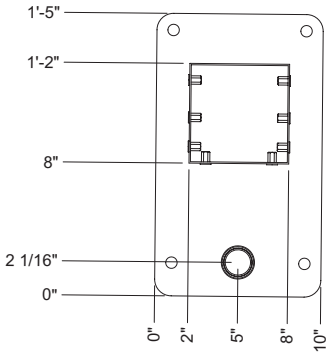

116358A02 DETAILS

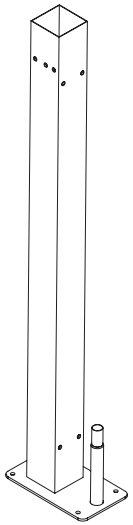

ISOMETRIC VIEW

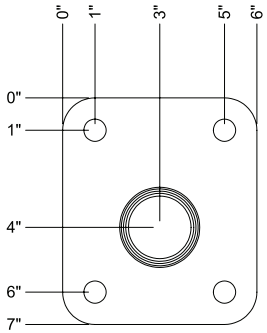

117169 DETAILS

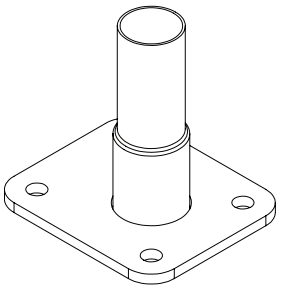

ISOMETRIC VIEW

Customer-Supplied Wood Baseboard (L & LE Models only)

BLUE

For the L and LE model buildings, the customer supplies the wood baseboard. (See **Section 5**.) Hardware (111818 brackets), FA4650 wood screws, and FA4482B Tek screws to attach the baseboard to the building frame are included. Use the diagrams on this page to correctly install a customer-supplied wood baseboard. ***Does not apply to the S & SE models.***

Minimum lumber dimensions for each baseboard: 2" x 8" x 144".

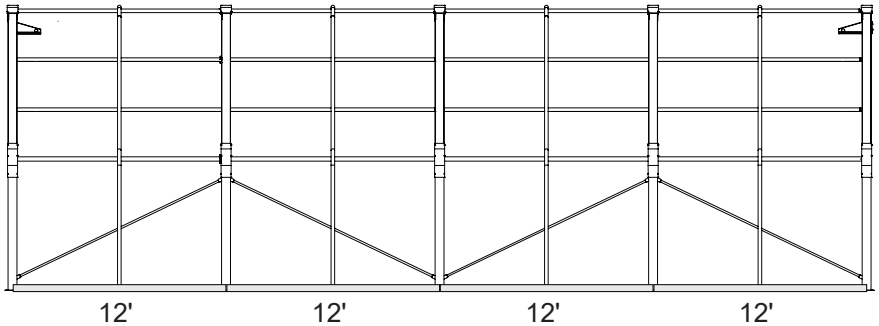

Sample 48' Frame showing installed wood baseboard in 12' lengths.

ATTENTION: WHEN SECURING U-CHANNEL TO THE WOOD BASEBOARD, USE THE FA4650 WOOD SCREWS SUPPLIED WITH THE BUILDING. *DO NOT USE TEK SCREWS TO ATTACH U-CHANNEL TO WOOD.*

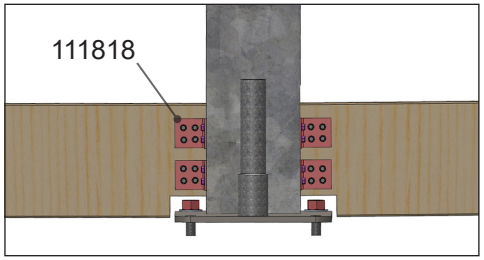

INSIDE VIEW: For square-tube rafters use four (4) 111818 brackets to secure the baseboard to the rafter. *Secure using FA4650 wood screws and FA4482B Tek screws.*

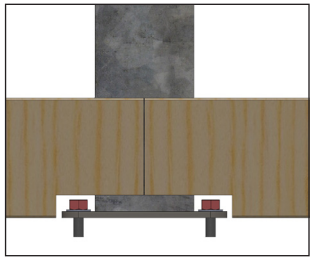

OUTSIDE VIEW: Cut the baseboard to fit over base plate anchor bolts.

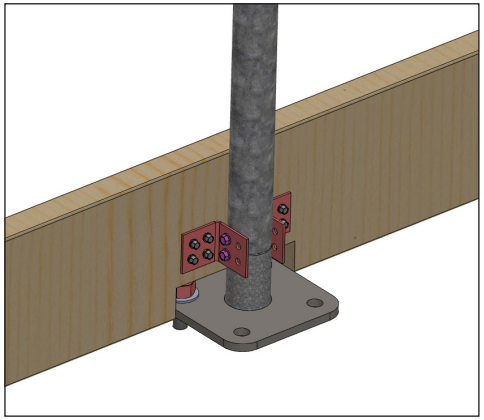

INSIDE VIEW: For the round 2.375" rafters, use two (2) 111818 brackets to secure baseboard to the rafter. ***Secure using FA4650 wood screws and FA4482B Tek screws.***

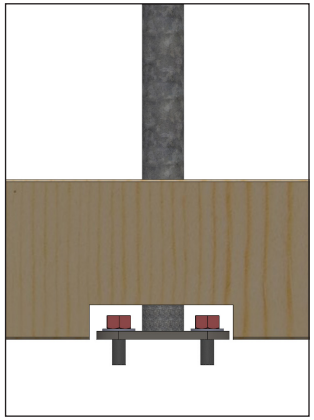

OUTSIDE VIEW: Cut the baseboard to fit over base plate anchor bolts.

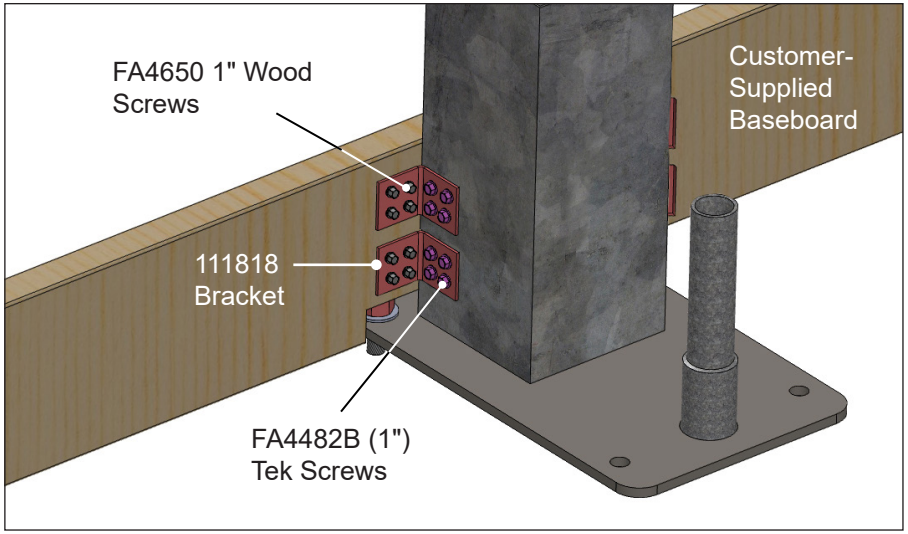

GREENHOUSE CARE AND MAINTENANCE

Inspecting your greenhouse after construction and throughout the year is essential. Periodic inspections help maintain the structural integrity of the building and can identify conditions and components that require attention. Read the following information and complete the inspections as presented to properly care for and maintain your greenhouse.

ATTENTION: Failing to complete these post-construction inspections in a timely manner and as instructed may result in injury and damage and may invalidate the warranty.

Initial Inspection

Immediately after completing construction, check these items:

- Inspect frame components to verify that all connections are tight and to ensure that all bolts and nuts are installed and tight. If fasteners are missing, install the recommended fasteners and tighten. Document any damaged frame components and contact your sales representative for solutions.
- Verify that all diagonal bracing is installed and tight. Inspect the points where the bracing is attached to the main frame to ensure that all mounting bolts are installed correctly and tight. Check to ensure that no braces contact the roof, side, or end wall film or polycarbonate panels.
- Check all fasteners used to secure the frame to the site (or foundation). *GrowSpan is not responsible for the design, construction, or maintenance of the foundation unless specified in the original contract.*
- Inspect the polycarbonate panel installation (if equipped) to ensure that panels are secured properly and as specified on the technical drawings for the building.
- Inspect the film cover (if equipped) to ensure that the retaining wire is properly installed in the U-channel and that the air inflation system (if equipped) is installed and working properly.
- If equipped, inspect the doors and verify that they are properly installed and adjusted. Open and close each door to ensure that it operates as designed and that the latch works properly. Read all documentation included with the door(s) to properly adjust and maintain.
- Inspect all vents (if equipped) and associated framing. Open and close the vent(s) to check vent operation. Inspect the vent in the closed position to ensure that it properly seals.

Periodic Inspection (Perform this inspection 2 – 4 weeks *after* construction is complete.)

Beginning after construction and throughout the life of your building, regional conditions (geologic, meteorologic, etc.) and overall use can affect components of your greenhouse. Perform the following inspection 2 – 4 weeks after completing construction:

- Inspect the film (if equipped) for punctures or damage. Also ensure that the contents of the greenhouse are not touching or rubbing on the film. Repair all film damage as instructed by your sales representative.
- Recheck all doors and vents (as equipped) to verify that they are operating and sealing properly when closed.

Semi-Annual Inspections

In addition to the items in the previous inspections, check the items that follow *at least* two (2) times throughout the year. (Allow a few months to pass between each inspection *unless weather conditions, weather-related events, or regional influences warrant more frequent inspections*.) Complete the following:

- Inspect the film cover (if equipped) for worn or damaged areas. Repair as needed and as instructed by your sales representative.
- Using the proper wrench or socket and ratchet, check all mounting plate bolts (if equipped) to ensure that these are tight and intact.
- Verify that the contents of the building are not touching or rubbing against the polycarbonate panels or film as equipped.
- Inspect building components for damage resulting from use or environmental conditions. Repair or replace damaged components as instructed by your sales representative.
- Consult the maintenance and care information included with original equipment manufacturer (OEM) components such as pedestrian doors, heating and cooling systems, and circulation fans and electric components. Service these items as instructed in the documentation included with those items. Contact the OEM for replacement parts and additional servicing information.
- Inspect the foundation. Report any changes, damages, or issues to the contractor responsible for the construction of the foundation. If damage or defects are found, repair as needed and inspect the building components to verify that the building was not affected by the damaged foundation. If the foundation requires repairs, contact a qualified professional to inspect the foundation *after* repairs are made to verify that the foundation is adequate to support the greenhouse.

  GrowSpan is not responsible for the design, construction, or maintenance of the foundation unless specified in the original contract.

Greenhouse Care

Proper care of your greenhouse is important and helps prolong the life of its components. Check or follow these items periodically to properly care for your greenhouse:

- Perform all inspections as previously instructed.
- Remove debris and objects that accumulate on the roof. Use tools that will not damage the roof panels or film when removing debris.
- Do not climb or stand on the frame or roof at anytime.
- Remove snow to prevent excess accumulation. Use tools that will not damage the film or polycarbonate panels when removing snow. Consult the information on the following page.
- Check the building contents and verify that nothing is touching the roof or the end panels (if equipped) that could cause damage.
- If needed, contact your sales representative for replacement parts, or for answers to your greenhouse care and maintenance questions.
- Service all OEM components according to the information provided by the manufacturer.
- Read, understand, and follow the information presented on the next page.
- Record all inspections in a log book for reference and warranty inquiries.

Special Conditions and Precautions: Snow and Ice Accumulation

To prevent damage to the building and its contents and snow and/or ice buildup, maintain an interior temperature ***of at least 50°F in cold climates***. ***Failing to do this may void the warranty***. To prevent possible injury and damage to the greenhouse and property, always remove snow that accumulates on or around the building.

Snow Accumulation: ***In areas where snow is possible***, establish an area *around the perimeter* of the building where snow can safely slide off the roof without damaging the greenhouse or its surroundings.

Walkways, storage sheds/containers, and parking areas should be away from this designated area to prevent property damage and injury.

Strong Winds and Extreme Weather Events

Doors and Vents: All doors and vents must be closed and secured during high wind events and severe weather.

Extreme Weather: Occurrences of severe or extreme weather may damage your greenhouse. Consult the warranty information that shipped with your greenhouse for answers to your warranty questions, or contact your sales representative for additional information.

Additional Care and Maintenance Instructions for Harsh or Humid Environments (Recommended)

Some environments require additional steps to properly care for and maintain the greenhouse. In addition to the above inspections and care requirements, the following recommendations can further protect the greenhouse and its components.

- Use caution if corrosive materials are stored inside the greenhouse. (*Storing these and other harmful chemicals inside the greenhouse is not recommended.)*
- Do not allow the contents of the greenhouse to touch the metal frame parts, cover panels, or end panels (if equipped).
- Remove any liquid or solids that spill, splash, or come in contact with the greenhouse components.
- Lubricate all hinges, chains, and vent drive shaft bushings, pinions and gear racks with a light film lubricate that protects parts from moisture, corrosion, and other effects resulting from a harsh or humid environment.
- Remove environmental residue from the frame, frame components, and cover and end panel material.

  ATTENTION: The use of water to remove some contaminates may be dangerous. Consult a qualified professional when in doubt and to safely remove materials that react violently with water. *Storing these and other chemicals inside the greenhouse is not recommended.*
- If manufacturing occurs in or around the greenhouse, verify that fumes, residue, and airborne pollutants resulting from that manufacturing are properly managed in an environmentally-sound manner. To ensure structural integrity, protect the components of the greenhouse from manufacturing by-products that cause corrosion, or that could weaken or deteriorate the main cover (or end panel) material.
- To prevent damage, injury, or both, replace deteriorated, damaged, or inoperable parts immediately. Contact your sales representative for all replacement parts.

Care & Maintenance Inspection Record

DATE	COMMENTS & OBSERVATIONS	INITIALS

DATE	COMMENTS & OBSERVATIONS	INITIALS