FarmTek FODDERPro

healthy, fresh feed every day

111628M FodderPro 2.0 Micro System

"...grow your own nutrient-rich fodder..."

*Actual system may differ slightly from what is shown.

WARNING: Cancer and Reproductive Toxicity - P65Warnings.ca.gov

Revision date: 02.16.23

Important Information

READ THIS DOCUMENT BEFORE YOU BEGIN

Thank you for purchasing the 111628M FodderPro 2.0 Micro System. When properly assembled and maintained, this product will provide years of reliable service. This guide includes important information needed to safely assemble and maintain the system. Read these instructions ***before*** you begin.

SAFETY PRECAUTIONS

- Wear eye protection.
- Wear gloves when handling metal tubes.
- Use a portable GFCI (Ground Fault Circuit Interrupter) when working with electric power tools and cords.

REQUIRED TOOLS

The following list identifies the main tools needed to assemble the fodder system. *Additional tools and supports may be needed.*

- Tape measure and marker
- Variable speed drill (cordless with extra batteries works best) and drill bit set with a 9/32" & 7/16" bit.
- Small hammer and gloves
- PVC Tube Cutting Tool
- Level 2' (or longer)
- Wrench set or adjustable wrenches
- Socket Set with Ratchet
- Straight Screw Driver
- 1-3/8" hole saw bit for the drain manifold—Step Bit recommended.
- Adjustable pliers
- 5/8" nut driver (or 5/8" socket)
- Ladder or work platform to work at the height of the fodder system frame.

ASSEMBLY PROCEDURE

Following the instructions as presented will help ensure the proper assembly of your fodder system. *This manual describes how to assemble a single* 111628M FodderPro 2.0 Micro System.

The steps outlining the assembly process are as follows:

1. Verify that all parts are included in the shipment. Notify customer service for questions or concerns.
2. Read these instructions and all additional documentation included with the shipment ***before*** you begin.
3. Gather the tools and assistants.
4. For best results, assemble the components in the order they are presented in these instructions.

UNPACK AND IDENTIFY PARTS

The following steps will ensure that you have all the necessary parts *before* you begin assembly.

1. Unpack the contents of the shipment and place where you can easily inventory the parts. Refer to the Bill of Materials/Spec Sheets.
2. Verify that all parts listed on the Bill of Materials/Spec Sheets are present. If anything is missing or you have questions, consult the Pictorial Parts Guide and all diagrams for clarification, or contact Customer Service.

QUICK START GUIDE

For a quick overview of this product and its components, consult the Quick Start Guide at the back of these instructions.

⚠ ELECTRICAL WARNING

Fodder frame is metal and will conduct electricity! Exercise caution if working around or on the frame with electric power tools. *Use cordless, battery-power tools.*

CONSULT THE SERVICES OF A QUALIFIED ELECTRICAL TECHNICIAN WHEN INSTALLING ANY PUMPS, ARTIFICIAL LIGHTING, OR OTHER ELECTRICALLY POWERED ACCESSORIES.

OPEN SYSTEM

The 111628M FodderPro 2.0 Micro System is an open system, which means that the water is not recycled for use *in the fodder system*. Unlike a closed system where the water is stored in a reservoir and recycled, the open system requires a water source and a drain to accept the unused water. The unused water can be recycled for use in other applications such as watering other plants; however, *to promote healthy fodder growth*, it is not recommended for reuse in the fodder system.

Connecting a Stand-Alone Unit to a 3/4" Main Supply Line

The 111628M FodderPro 2.0 Micro System includes all the components to assemble the main fodder frame, 6' channels, drain manifold, and supply manifold. Additional components needed for the system are not included and require an additional purchase. These components—required, recommended, and optional—are noted in the diagram below. Contact your sales representative for additional information and to purchase the additional components.

Consult the services of an electrician and/or professional contractor during assembly and when attaching the main water supply line to the fodder system. The diagram below shows the basic items needed to supply and control the water to the fodder system.

ATTENTION: Stand-Alone System: Connect the main water supply to the top or bottom of the supply manifold. Diagram below shows a bottom connection.

NOTE: The 3/4" WF3311 ball valve connected to the 3/4" main water supply line and the WF2990 slip cap connected to the top of the supply manifold are included with the fodder kit.

Additional Requirements for this Open System:

- Floor Drain (or method to manage unused water)
- Level, solid surface to support assembled fodder system
- Light Source–natural or artificial or a combination of both
- Electricity
- Water Source

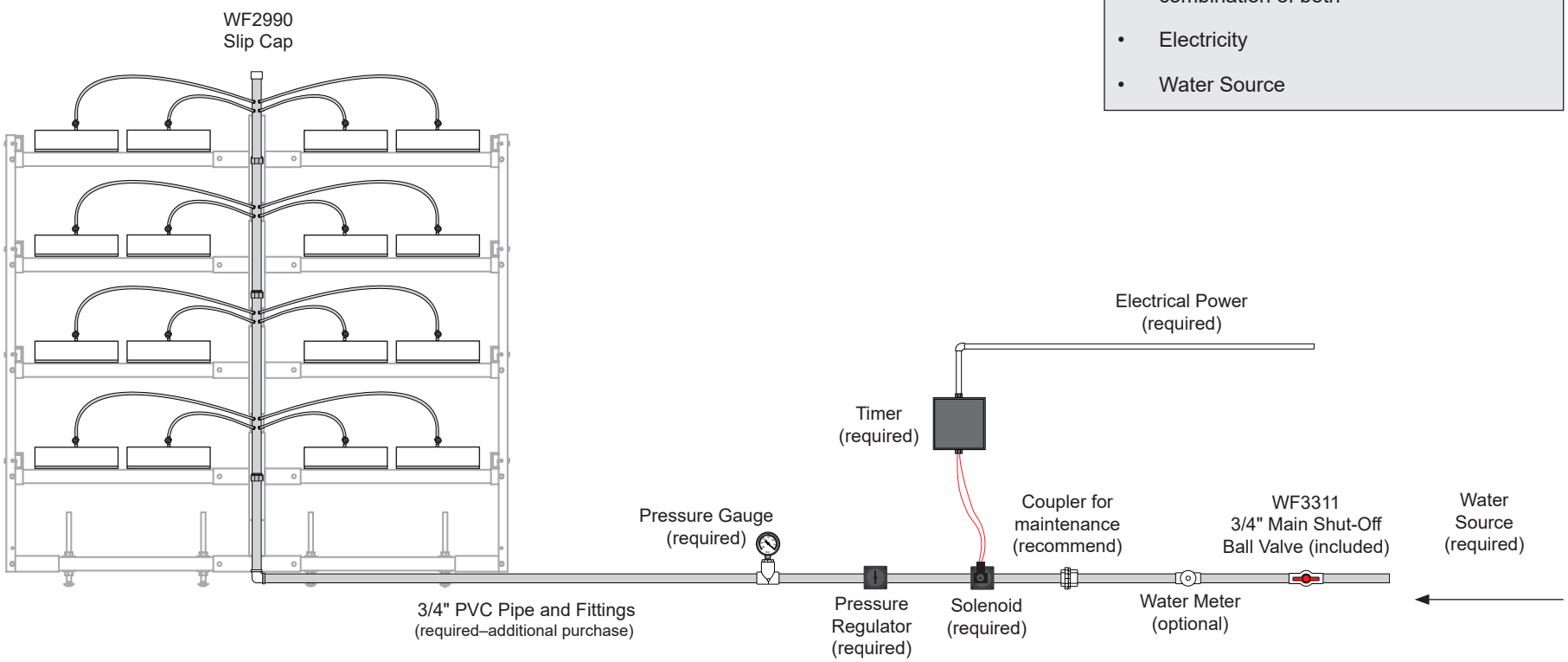

PICTORIAL GUIDE

The following graphics and photos will help identify the different parts of the fodder system. (Some parts may not be shown.) Quantity when noted is in ( ) following the stock number.

FA4482B
Tek Screw

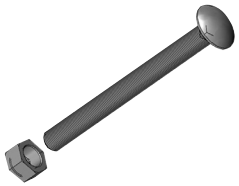

112502 Carriage Bolt (8)
FALB08B Nut (16)

FA4472B (6)
Tek Screw

FALB04B 3/8"
Nuts (6)

FAME09B Flat
Washer (16)

111906 1" Sammy
for 3/8" Threaded rod (2)

Components for hanger brackets: FAK26 threaded rods (2), 111907 conduit hangers (2), and FALB04B nuts (3 per bracket assembly).

ATTENTION: Drill the mounting hole in the 111907 hanger bracket to 7/16" if needed to accept the 3/8" threaded rod. ***Exercise caution.*** Clamp the hanger bracket in a vice before drilling!

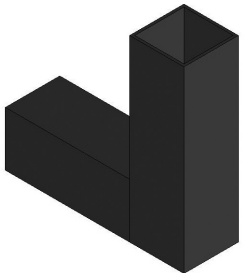

104625 (4)

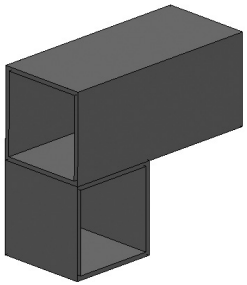

111485 (16)

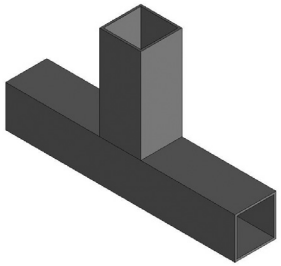

104626 (2)

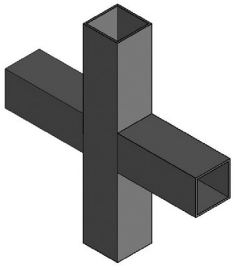

104627 (8)

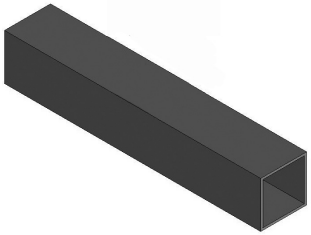

(12) S15P048 @ 48"
(16) S15P027 @ 27"
(2) 111628A @ 55 3/4" drilled (End Frame)

PICTORIAL GUIDE (continued)

106808 (3)

WF3311 (1) 3/4" Ball Valve

WF6682 (16)

WF6717 (9) 2" Slip Caps
WF2990 (1) 3/4" Slip Cap

111029 (16)
End Cap w/ Outlet

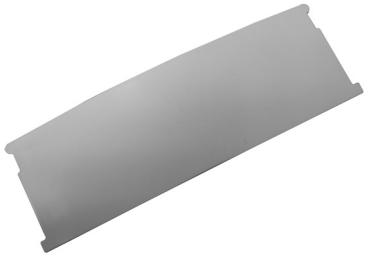

111030 (16)
End Cap No Outlet

112509 (3)
Adhesive

WF6990
PVC Cement
and
113372 Purple
Primer

105794

111560 (30') 2" PVC

107651 Bucket (2) and
111041 Soaker Bag (2)

PVC PRIMER & PVC CEMENT

Follow all directions printed on pvc primer and cement containers. ***Purple color of primer does not fade***! Use caution during application to reduce spills and over application at joints.

Prime all joints before assembly.

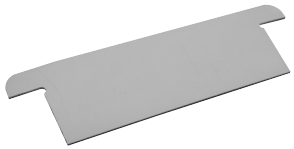

111822 (1)
Seed Spreader

111303 Seed
Screen (16)

SPECIAL NOTES AND CAUTIONS

The support frame for the 111628M FodderPro 2.0 Micro System is designed to save assembly time and to better serve your growing needs. Before you begin, read the information that follows.

⚠ CAUTION!

DO NOT CLIMB ON FRAME!

TO PREVENT INJURY AND POSSIBLE DAMAGE TO THE FODDER SYSTEM AND RELATED COMPONENTS, NEVER CLIMB ON THE ASSEMBLED OR PARTIALLY ASSEMBLED FRAME.

NEVER USE THE FRAME ENDS AS A LADDER TO REACH THE UPPER LEVEL OF THE FODDER FRAME!

ALWAYS POSITION THE FODDER CHANNELS ON THE DIFFERENT LEVELS IN A WAY THAT EVENLY DISTRIBUTES THE WEIGHT. NEVER LOAD ALL HEAVY CHANNELS ON ONE SIDE OR ON THE TOP LEVEL OF THE ASSEMBLED FRAME. ALWAYS PLACE HEAVY CHANNELS ON THE LOWER LEVELS ON EACH SIDE OF THE FRAME.

NEVER REMOVE MATURE FODDER FROM CHANNELS ON ONE SIDE OF THE FRAME ONLY. ALTERNATE FROM SIDE TO SIDE TO MAINTAIN EVEN WEIGHT ON THE FRAME WHEN HARVESTING FODDER.

AFTER FRAME SLOPE IS SET, ANCHOR THE BASE RAIL OF EACH FRAME END TO THE CONCRETE USING ANCHOR BOLTS WHEN POSSIBLE. PURCHASE BOLTS LOCALLY OR CALL YOUR SALES REPRESENTATIVE FOR ADDITIONAL INFORMATION.

CONSULT THE SERVICES OF A QUALIFIED CONTRACTOR FOR OTHER WAYS TO ANCHOR YOUR SYSTEM WHEN IT IS NOT POSITIONED ON CONCRETE.

ATTENTION: CONSULT ALL DIAGRAMS AND THOSE NEAR THE BACK OF THIS GUIDE TO IDENTIFY CRITICAL DIMENSIONS, PART NUMBERS, AND PART LOCATIONS FOR THE FODDER FRAME.

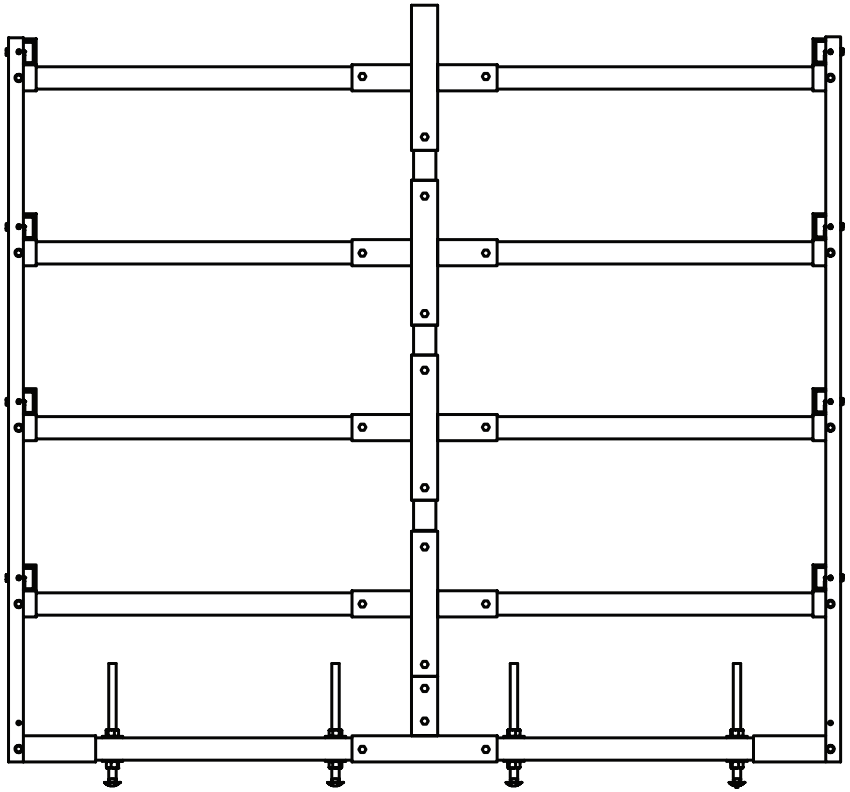

Diagram above shows the end frame for your 111628M FodderPro 2.0 Micro System.

1

ASSEMBLE MAIN FRAME: Base Tubes with Adjustable Levelers

Consult the Quick Start section of this guide for an overview of the system and additional diagrams. Gather the parts and complete the steps that follow to assemble the two end frames.

Required parts for *base tubes and levelers*:

- (2) 104626 3-Way Connectors
- (2) 111628A Square Tube (drilled) for end base rails
- (8) 112502 carriage bolts, (16) FAME09B flat washers, & (16) FALB08B nuts
- FA4482B Tek Screws and Magnetic Nut Setter (3/8" x 2-9/16")

ATTENTION: Install Tek screws as shown for best results and a uniform appearance. ***Review all diagrams for clarification.***

Complete these steps:

1. Take the carriage bolts, nuts, and flat washers and assemble as shown in Figure 1.
2. Assemble the two end base rails as shown in Figure 2. The 3-way connector should be loose between the levelers at this time.
3. Locate the center of each 3-way connector and mark with a pencil or marker.
4. Align the center mark on each connector with the center of the base rail and secure the connector to the base rail as shown in Figure 3.
5. Continue by installing the vertical frame tubes.

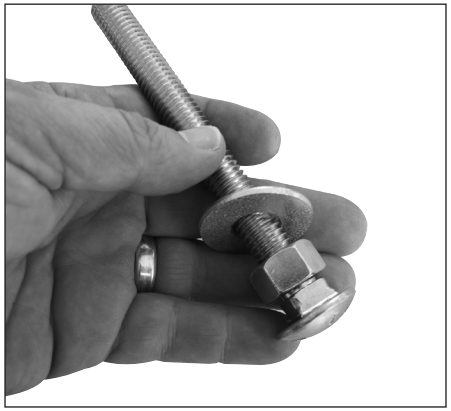

FIGURE 1: Assemble levelers as shown.

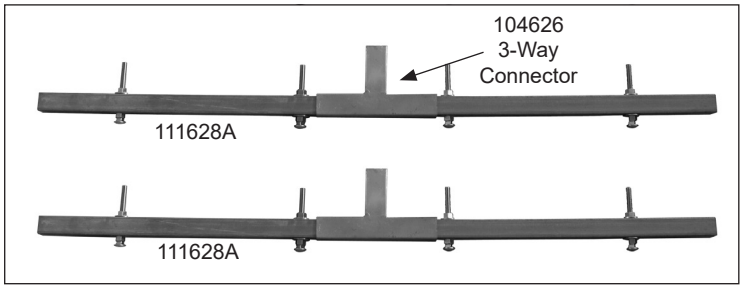

FIGURE 2: Assemble base rails as shown. The 3-way connector is loose at this point. Levelers should be finger-tight to allow for adjustments once the system is assembled and in position.

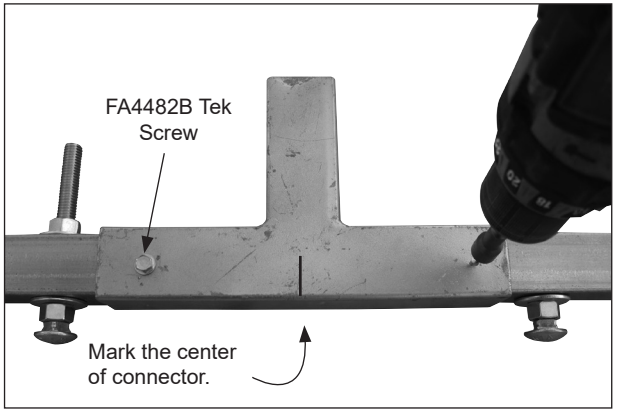

FIGURE 3: Center the connector *on the base rail* and secure using two (2) FA4482B Tek screws.

1

ASSEMBLE MAIN FRAME: Support Frames

Gather the parts and complete the steps that follow to assemble the two (2) support frames.

Required parts for *each support frame*:

- (1) Assembled base rail (from previous page)
- (4) 104627 4-Way Connectors
- (1) S15P048 Square Tube (plain) for vertical support
- FA4482B Tek Screws and Magnetic Nut Setter (3/8" x 2-9/16")

ATTENTION: Install Tek screws as shown for best results and a uniform appearance. ***Review all diagrams for clarification.***

Complete these steps:

1. Take the S15P048 tube and slide one 4-way connector onto one end. Slide the end of the tube into the 3-way connector of the base rail and secure using two (2) Tek screws (Fig 1).
2. Using the diagram to the right, position the 4-way connector as shown and secure to the vertical tube using two (2) Tek screws (Fig. 2).
3. Move to the top of the vertical tube and slide three (3) more 104627 connectors onto the tube (Fig. 3).
4. Using the diagram to the right and in the Quick Start section, space each connector on the tube and secure using two (2) Tek screws (Fig. 4).
5. Repeat the steps to assemble the remaining support frame.
6. Continue with the next procedure.

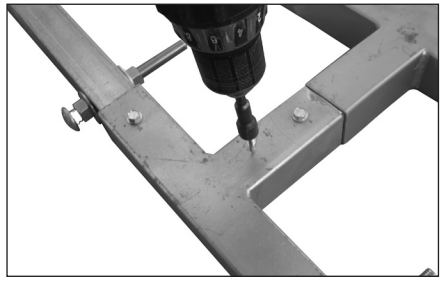

FIG. 1

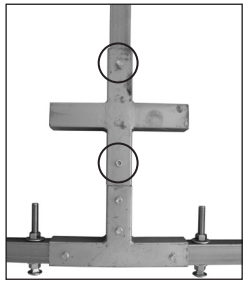

FIG. 2

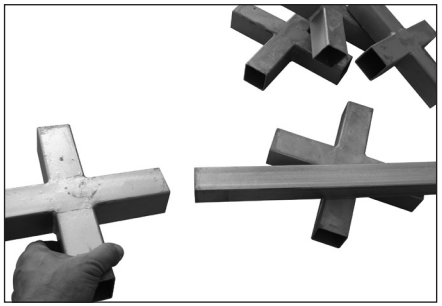

FIG. 3

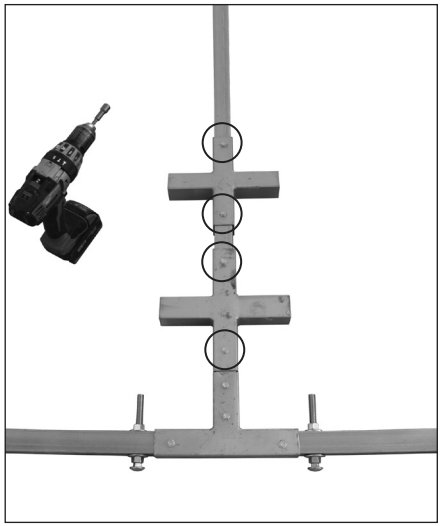

FIG. 4

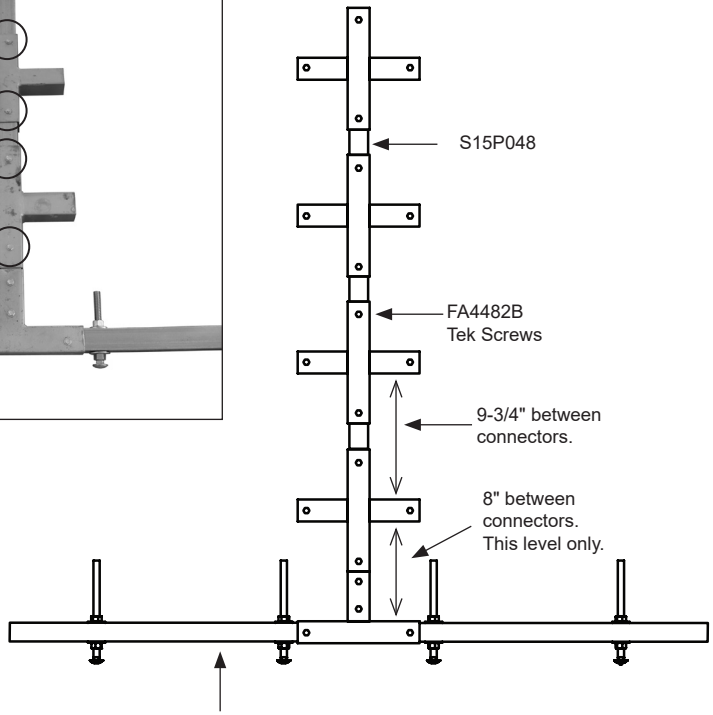

1

ASSEMBLE MAIN FRAME: Attach Support Arms (End Frames)

Gather the parts and complete the steps that follow to attach the support arms to the assembled end support frames.

Required parts:

- (2) Assembled end support frames (from previous page). ***These include the longer 111628A base rail.***
- (16) S15P027 Square Tube (plain) for support arms
- FA4482B Tek Screws and Magnetic Nut Setter (3/8" x 2-9/16")

ATTENTION: Install Tek screws as shown for best results and a uniform appearance. ***Review all diagrams for clarification.***

Complete these steps:

1. Position one end support frame on a flat surface.
2. Slide one S15P027 square tube into the lower 4-way connector and secure it in place using an FA4482B Tek screw.
3. Repeat this process to attach all remaining support arms to complete the first end support frame. See completed end support frame to the right.
4. With assistance, carefully move the frame to the location where the fodder system will be assembled.
5. Repeat the above steps to assemble the remaining end support frame.
6. Continue with the assembly of the two (2) long base rails as shown on the next page.

ASSEMBLE END SUPPORT FRAME

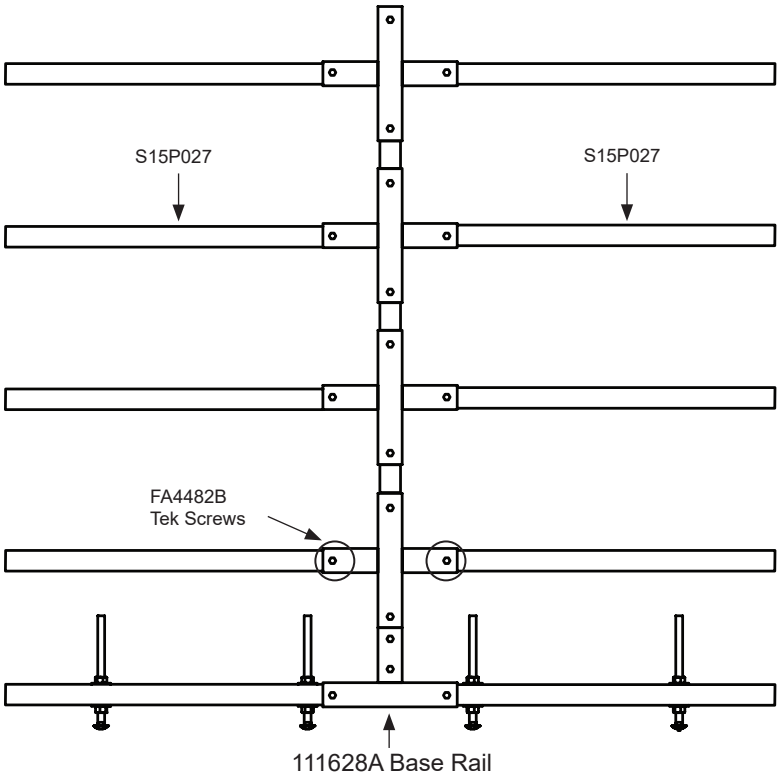

1

ASSEMBLE MAIN FRAME: Two (2) Base Rails

Gather the parts and complete the steps that follow to assemble the two (2) long base rails.

Required parts for *each base rail*:

- (1) S15P048 Square Tube (plain) for base rail
- (2) 104625 2-Way Connector
- FA4482B Tek Screws and Magnetic Nut Setter (3/8" x 2-9/16")

Complete these steps:

1. Attach one 2-way connector to each end of the tube as shown. ***Verify that each connector is tight to the end of the tube.*** Secure using one Tek screw for each connector. Verify that the length of the assembled tube is 51 1/2".
2. Repeat the steps to assemble the remaining base rail.
3. Continue by assembling the outer frame tubes.

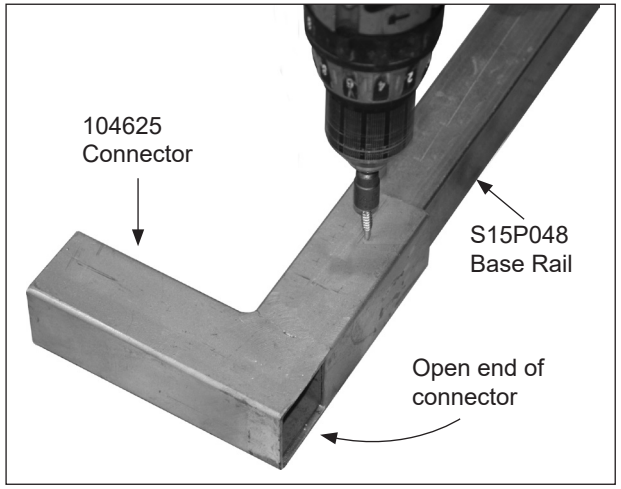

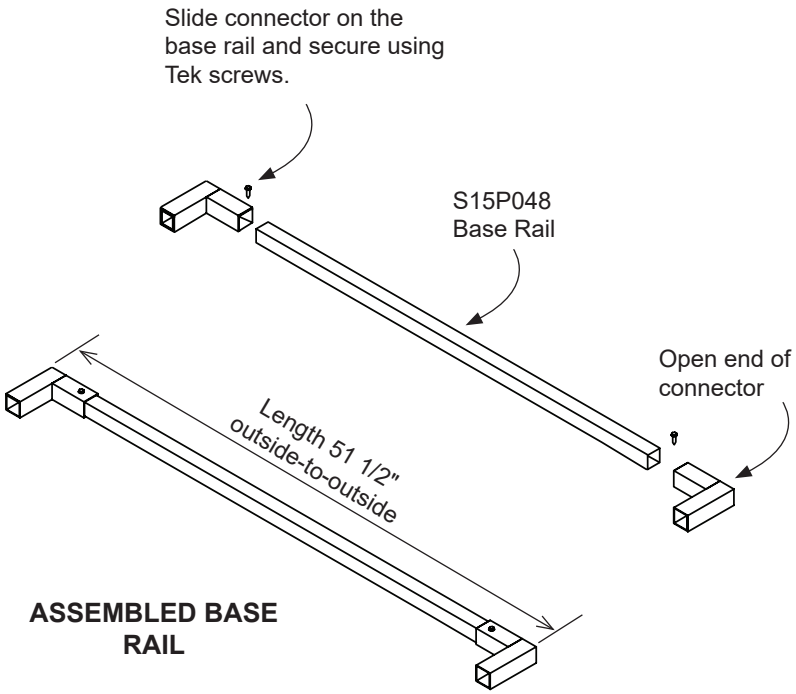

1

ASSEMBLE MAIN FRAME: Outer Frame Tubes

Gather the parts and complete the steps that follow to assemble the outer frame tubes.

Required parts for *each outer frame tube*:

- (1) S15P048 Square Tube (plain) for base rail
- (2) 111485 2-Way Square Tube Fittings
- FA4482B Tek Screws and Magnetic Nut Setter (3/8" x 2-9/16")

Complete these steps:

1. Using Figures A and B, mark the S15P048 tube using a 111485 fitting as a template.
2. Attach a 2-way connector to each end of the tube as shown. Secure using one Tek screw for each connector. Verify that the length of the **assembled tube is 51 1/2"**. ***Do not install outer frame tube flush with the end of the connectors.*** *The smaller off-set tube of the connection slides over each shelf support tube attached to the end frames.* See diagrams and photos.
3. Repeat the steps to assemble *all remaining outer frame tubes*.
4. Continue by assembling the main frame.

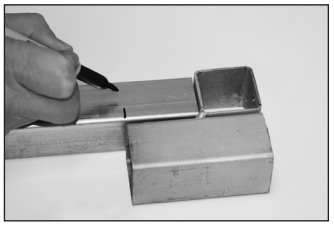

Fig. A: Pre-mark tube for easier assembly.

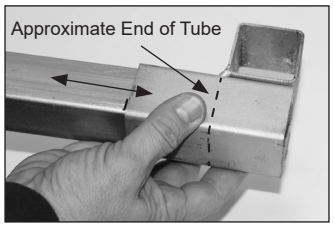

Fig. B: Minor adjustments to the connector position will be require when setting length.

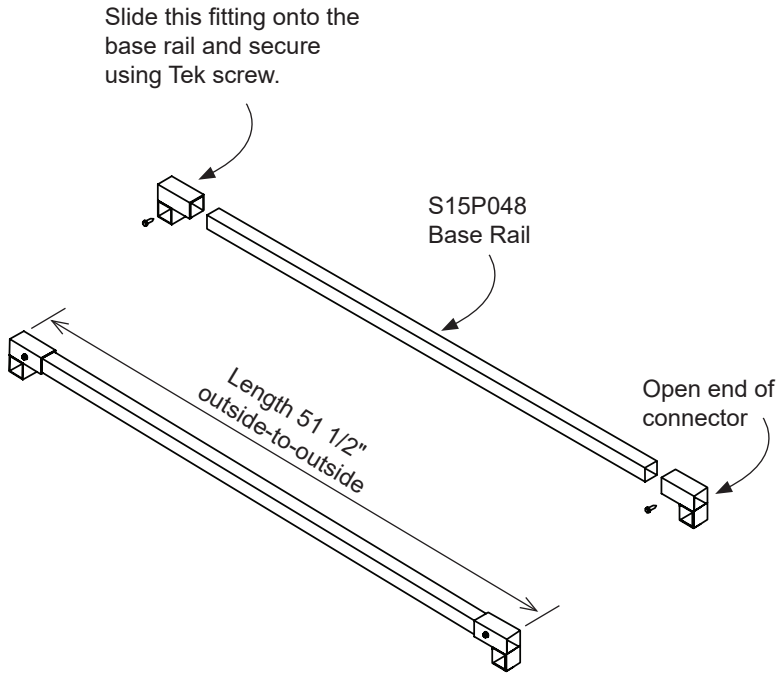

1

ASSEMBLE MAIN FRAME: Assemble Frame

Gather the different assembled components and complete the steps that follow.

Required parts for this procedure:

- (2) Assembled End Support Frames
- Assembled base rails (2) and assembled outer frame tubes (8)
- FA4482B Tek Screws and Magnetic Nut Setter (3/8" x 2-9/16")

ATTENTION: Install Tek screws as shown. ***Review all diagrams for clarification. ASSISTANTS ARE NEEDED TO ASSEMBLE THE FRAME. DO NOT ATTEMPT ALONE.***

Complete these steps:

1. Gather the two (2) end support frames and two (2) assembled base rails.
2. With assistance, assemble the frame as shown in the diagram. Install base rails flush with the ends of the end support frames.
3. Check outside-to-outside dimensions of the assembled base. Length at 51 1/2"; width at 55 3/4".

   NOTE: If the dimensions are incorrect for the assembled frame, verify that you have installed the base rails flush with the ends of the end support base tubes. Also verify that the length of each assembled base rail is 51 1/2".
4. Take an outer frame tube and slide it onto the support arms of the end support frames as shown. Assemble main frame from the bottom and work toward the top.

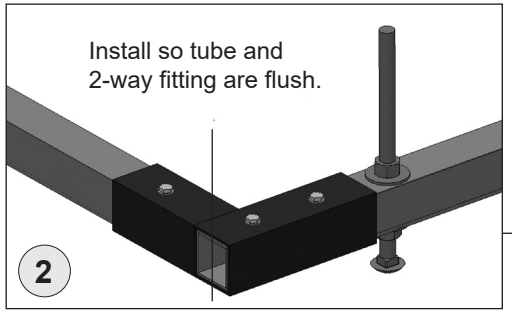

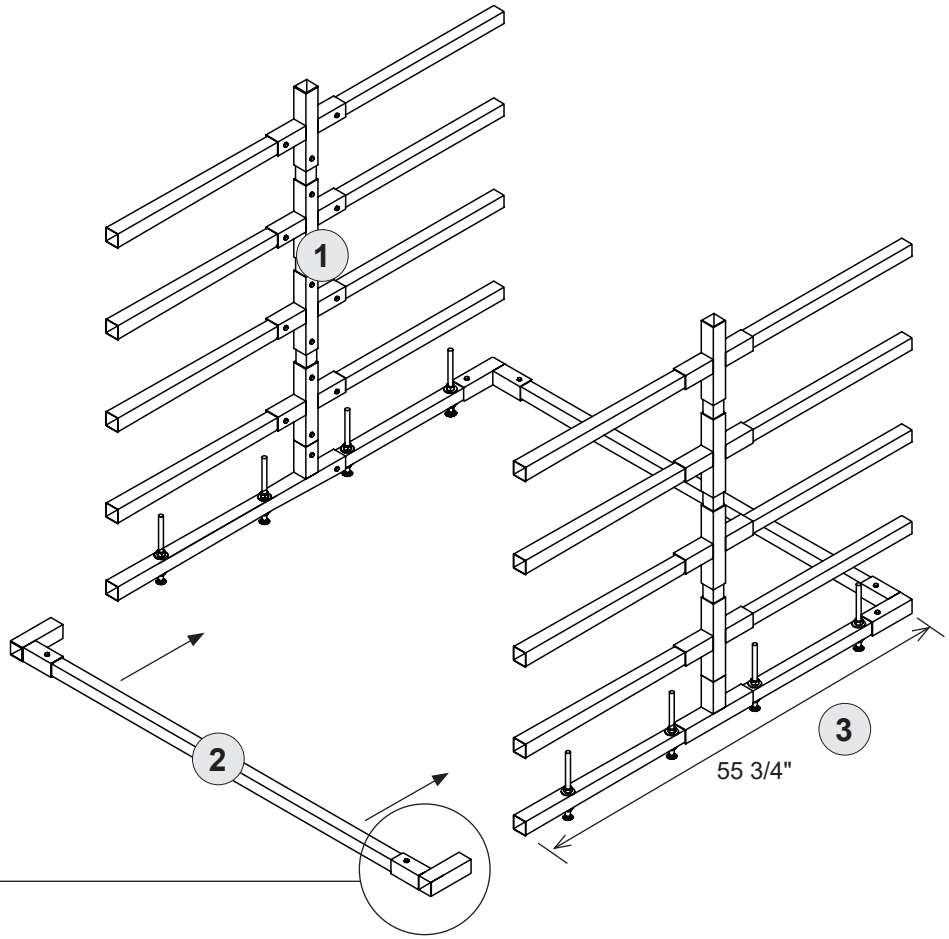

1

ASSEMBLE MAIN FRAME: Assemble Frame—continued

5. Secure the tube to the support arms of each end support frame. See insert below.
6. Continue adding outer frame tubes until the main frame is assembled.
7. Verify that all Tek screws are installed to secure fittings and support tubes.

Install Tek screw through fitting and into support arm. Install so support arm is flush to the outside of the 2-way fitting.

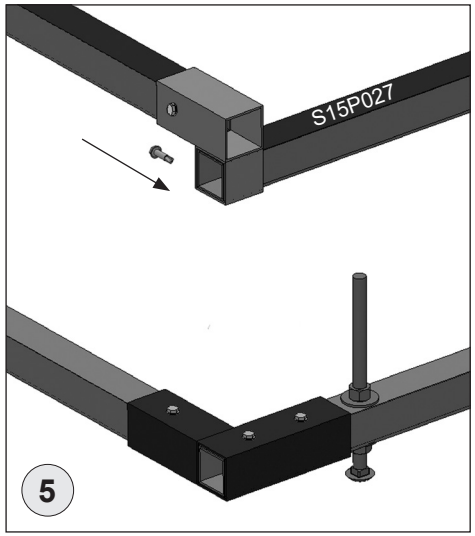

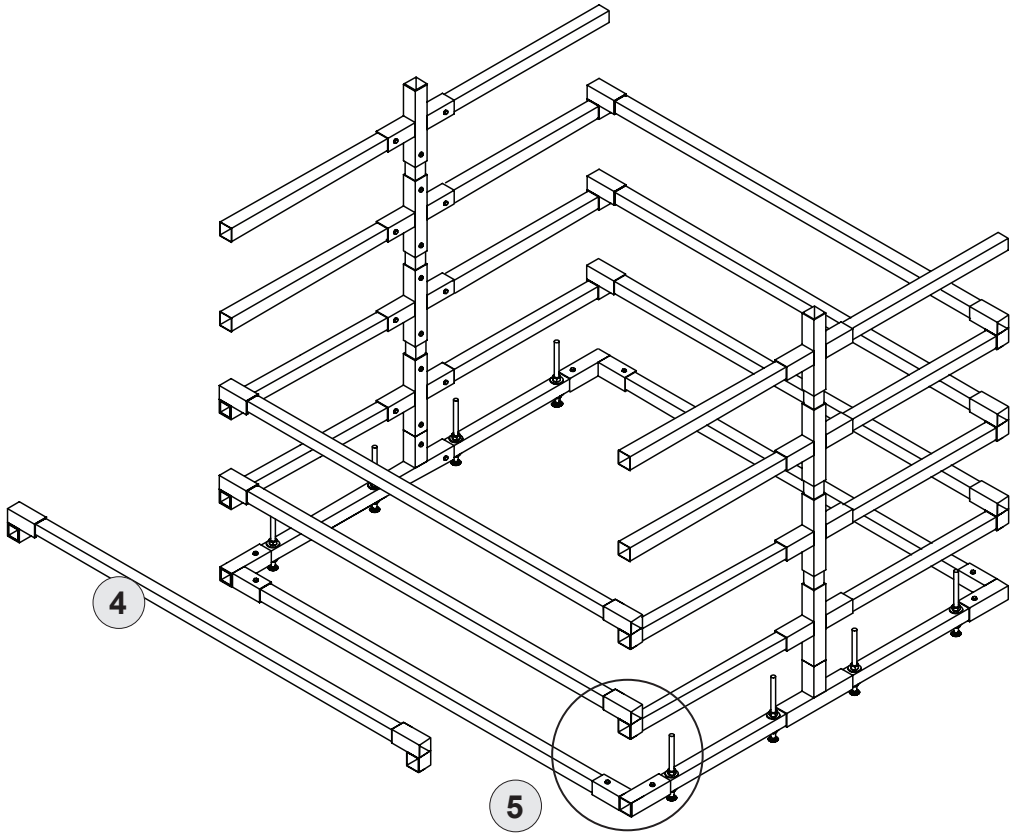

1

ASSEMBLE MAIN FRAME: Assemble Frame—continued

8. Next, install all 111628MC corner braces.

   NOTE: These braces include pre-drilled mounting holes that mirror the spacing of the individual levels. If the holes don't match the spacing of the shelves, flip the brace end-for-end. Position the holes spaced closest together at the bottom. Use the diagram in the Quick Start section to verify spacing of shelves if needed.

9. Continue with the assembly of the fodder channels.

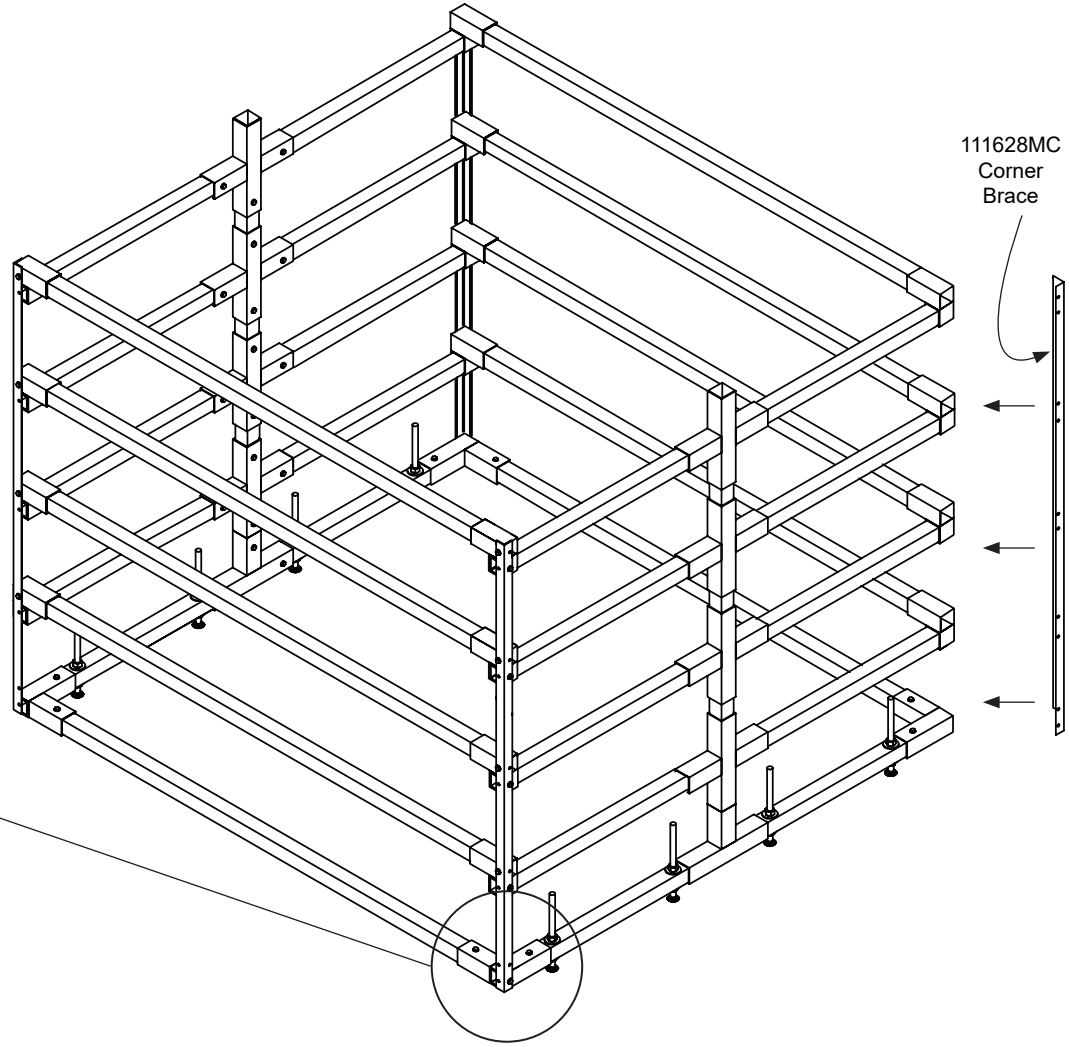

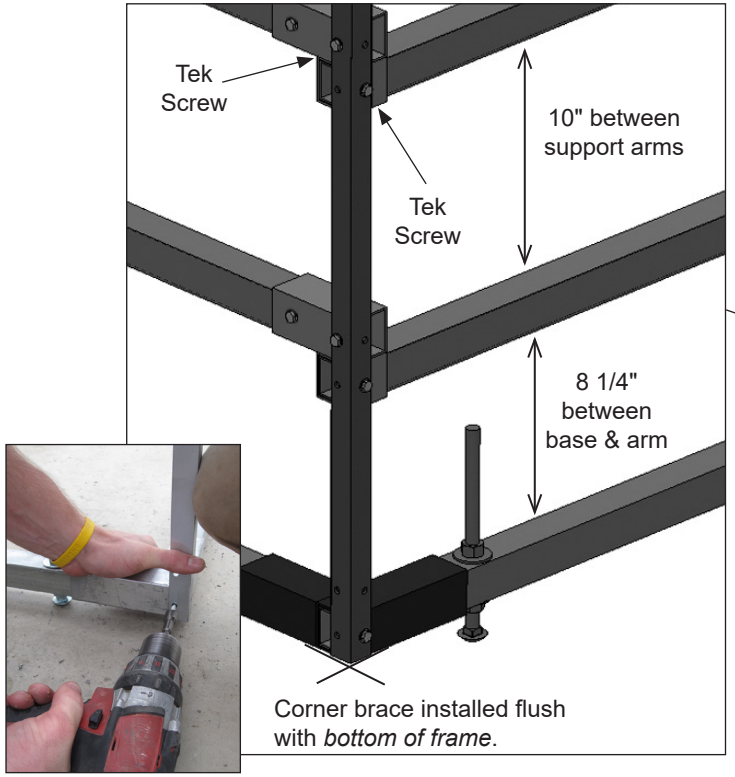

ATTENTION: Install corner braces flush *to the bottom of the main frame*. Measure to ensure that the space between the different levels is as shown in the diagrams. Lift or press down to adjust the free end of each support arm as needed before you attach the corner brace.

2

ASSEMBLE ALL 6' FODDER CHANNELS: 111582Z6

Required parts:

- 111030 End Cap (plain)
- 9/32" Drill Bit and Drill

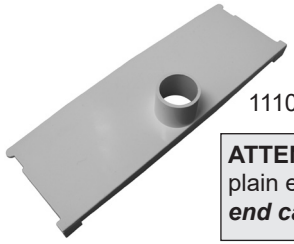

111029 End Cap

ATTENTION: Complete this procedure for the 111030 plain end caps only. ***Do not drill holes in the 111029 end caps, which have an outlet.***

Complete these steps to prepare the 111030 end caps:

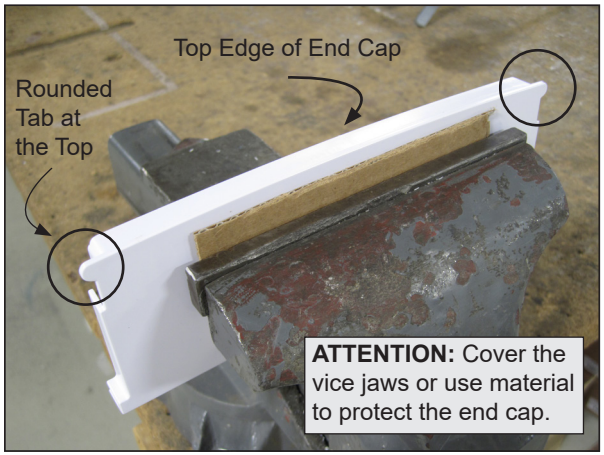

1. Gently clamp the 111030 end cap in a vice or similar device with the top, rounded edge up.

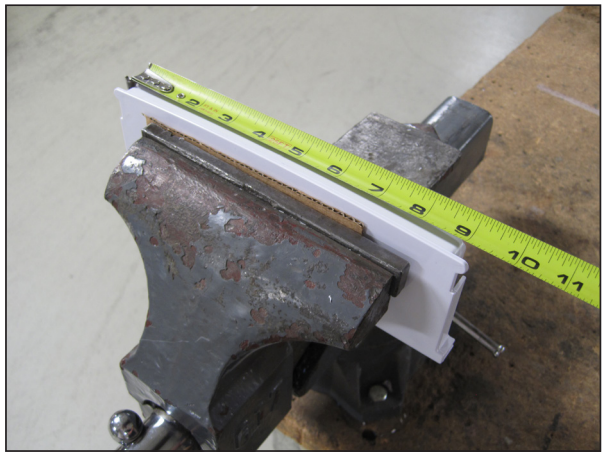

2. Locate the middle of the end cap lip and mark the position using a pencil.

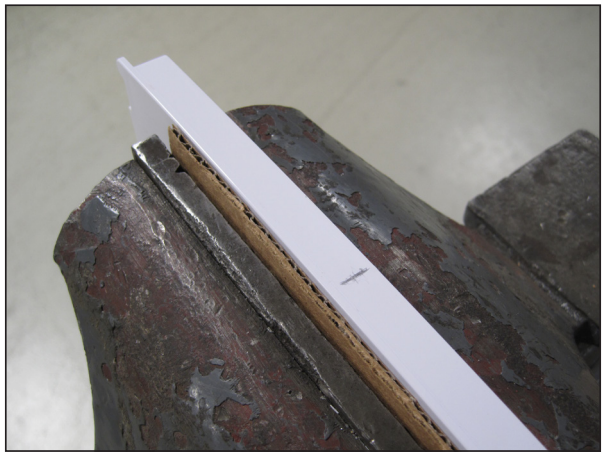

NOTE: Center mark on top lip is shown.

3. Using a drill and a 9/32" bit, carefully drill a hole in the top lip of the 111030 end cap.

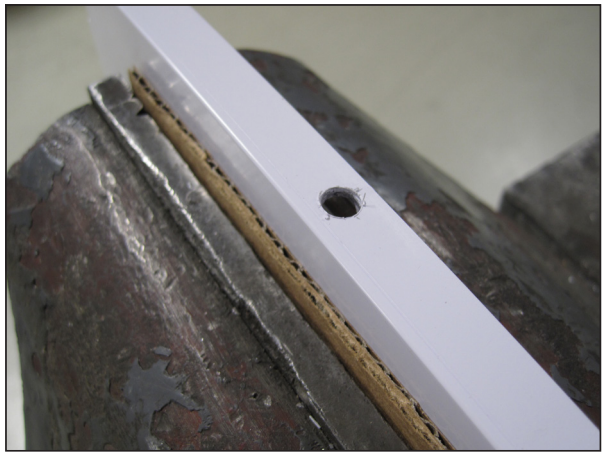

4. Remove the loose end cap material from the drilled hole.

5. Repeat the steps to drill a hole in center of all remaining 111030 end caps. ***Do not drill the 111029 end caps.***

2

ASSEMBLE ALL 6' FODDER CHANNELS: 111582Z6

Required parts:

- 111029 End Cap (w/outlet) and 111030 End Cap (plain); 111582Z6 GT80 NFT Channels @ 6' long (each)
- 112509 Instant Adhesive

Complete these steps:

1. Place one 6' channel (111582Z6) on a flat surface for assembly. Cover the assembly surface if needed to protect it from the adhesive.
2. Attach the plain end cap (drilled hole–111030) to one end of the 6' channel. *Coat all edges of the channel end with adhesive before installing the cap.* ***Cut nozzle tip at a 45° angle and just enough to allow the adhesive to flow. A thin, continuous bead is all that is required.***
3. Move to the other end of the channel and install the 111029 end cap (with outlet). *Coat all edges of the channel end with adhesive before installing the cap.*
4. Repeat Steps 1-3 for all remaining 6' channels.
5. Once all end caps are in place, carefully flip over one channel so the bottom is facing up and the open top is down.
6. Take the adhesive and secure the end caps to the 6' channel. Photos show securing the end cap with an outlet. Secure the plain end caps in the same manner.

   Apply adhesive in a well-ventilated area. Read the 112509 adhesive container information for additional precautions.

   NOTE: Apply the adhesive to the *outside of the channel assembly*. Seal all edges and seams of the end caps to prevent leaks. *Apply the adhesive to the inside of the channel only as needed to repair leaks. Verify that surfaces are dry before applying additional adhesive to seal end caps.*
7. Repeat for all remaining 6' fodder channels.
8. Allow the adhesive to dry before moving the channels or testing the system. See the note to the right to test channels for leaks.

   NOTE: Read the instructions on the adhesive container for recommended drying times.
9. Continue with the assembly of the drain manifold.

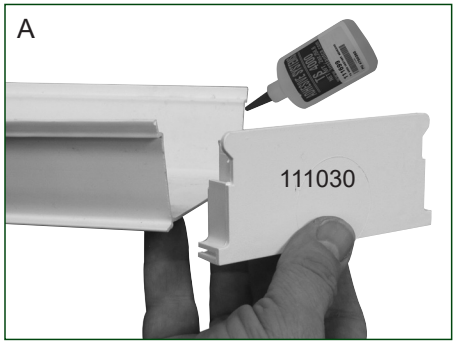

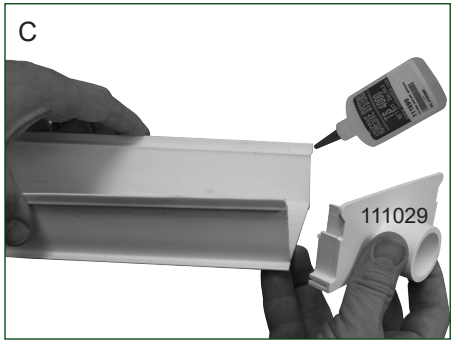

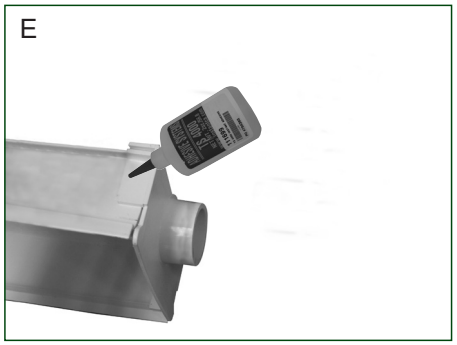

ATTENTION: Coat the seams evenly with a thick layer of adhesive to coat all gaps. Once the adhesive has dried according to the directions, fill channel with water, set on a level, dry surface, and check for leaks. Reseal if necessary.

When checking for leaks, slide a 90° elbow onto the outlet end cap and turn the open end of the elbow to the 12 o'clock position, and fill the channel.

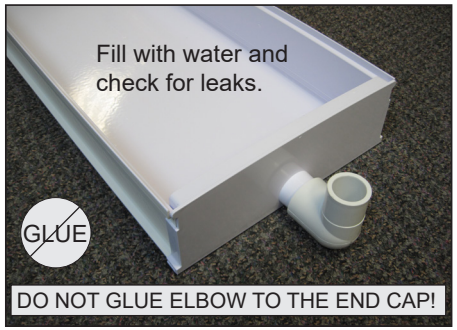

3

ASSEMBLE THE DRAIN MANIFOLD

Required parts:

- 111560 2" PVC Pipe, WF6717 Slip Caps, and 111696 Double Hub (Cross Fitting)
- 111906 1" Sammys and 111907 Conduit Hangers
- FAK26 Threaded Rods and FALB04B Nuts
- 113372 Primer and WF6990 PVC Cement

Complete these steps:

1. Cut 8 horizontal tubes at 24" each. Use the 2" (111560) PVC.
2. Clean the ends of the PVC tubes to remove any loose material.
3. Mark the hole locations on each 24" tube and drill the holes for the drain elbows of the channels. Use a *1 3/8" hole saw bit* and a drill. (If possible, drill the holes in the PVC tube using a drill press for accuracy.) Remove loose material from around the holes and from inside each tube.

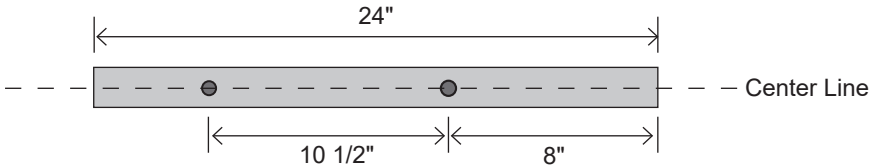

4. After cleaning each 24" tube, attach the WF6717 slip cap to the end of the tube as shown. ***DO NOT CEMENT THE CAPS TO THE TUBES. Caps must remain free for cleaning of the tubes. Set these tubes aside for later assembly of the drain manifold.***

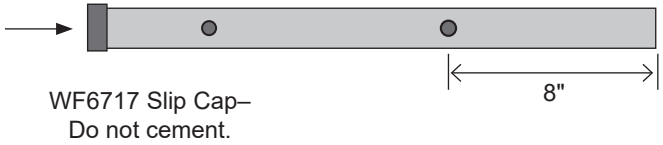

5. Using the 111560 2" PVC pipe, cut three (3) pieces at 8".
6. Take the 111696 cross fittings and 8" tubes and assemble the center stack of the drain manifold as shown. ***Use PVC primer and cement to attach the vertical 8" tubes to the cross fittings.*** Assemble on a flat surface for best results and to keep the fittings aligned.

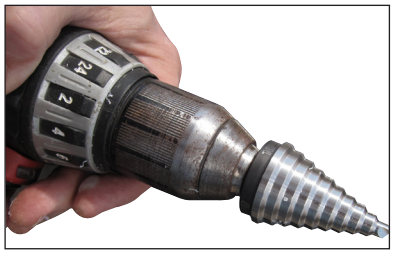

For best results, use a step bit if available to drill the holes in the pvc tubing.

STEP 3

DRAIN MANIFOLD – CENTER STACK

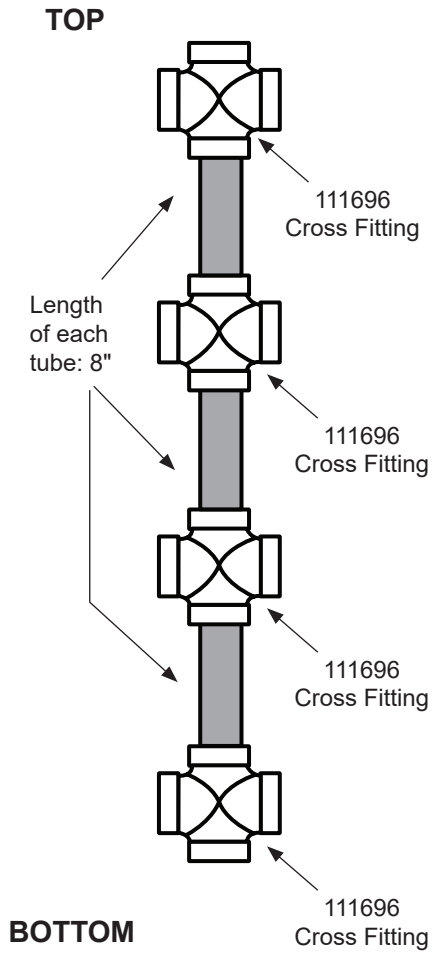

NOTE: Cement all 8" PVC sections to the 111696 Cross Fittings using primer and pvc cement.

3 ASSEMBLE THE DRAIN MANIFOLD — continued

7. Once the PVC cement sets, take the center stack and attach it to the drain end of the assembled frame using the 111906 Sammys, 111907 conduit hangers, 3/8" threaded rods, and 3/8" nuts. Tighten hangers just enough to hold stack in place. Stack will be adjusted (up or down) once the horizontal drain tubes are installed. ***Do not cut the 12" threaded rods for this end. These can remain 12" long.*** The lower mounting stud and hanger can be installed too. It is not shown; see call out below. It is used to secure the lower end of the manifold when the final short pipe section is added.

For best results, install the 111906 Sammys through the 4-way fitting and into the vertical support tube. See the photo to the right.

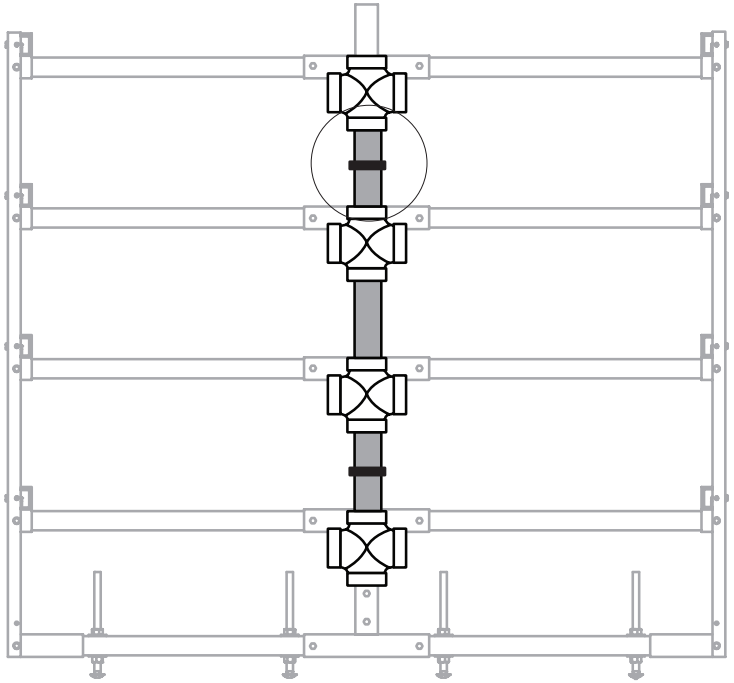

ATTENTION: Drill the mounting hole in the 111907 hanger bracket to 7/16" if needed to accept the 3/8" threaded rod. ***Exercise caution.*** Clamp the hanger bracket in a vice before drilling.

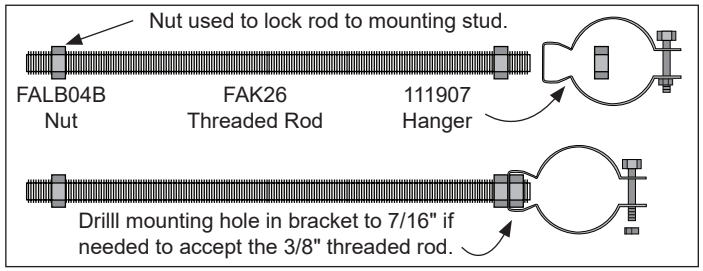

Diagram to the left shows how to assemble each mounting bracket. The 111906 Sammys are first installed using a 5/8" nut driver or socket. After securing each FAK26 threaded rod to a 111907 hanger, the assembly is then threaded into the 111906 Sammy and locked into place with the FALB04B 3/8" nut.

3

ASSEMBLE THE DRAIN MANIFOLD — continued

8. Next, take the prepared 24" tubes with the caps and verify that each cap is installed at the end of the tube closest to the first drain hole.

9. Attach the tubes to the manifold stack. Coat outside of tube end and inside of cross fitting with PVC primer and cement and insert end into an open socket of cross fitting.

   NOTE: Verify that drain holes of each tube are pointing up. If the 6' fodder channels are resting on the fodder frame, slide these back and away from the drain manifold tubes until the PVC cement has dried.

   Adjust tubes as needed before PVC cement sets up. Also, ***before cement sets***, slightly lift cap end of tube to create a minor slope toward center stack. This will help water drain from horizontal tubes.

10. Repeat until all horizontal drain tubes are installed.

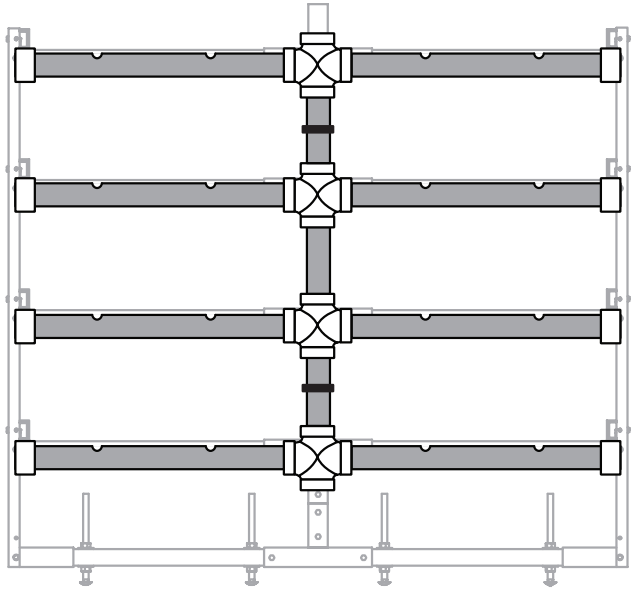

Drain manifold complete with all horizontal tubes installed.

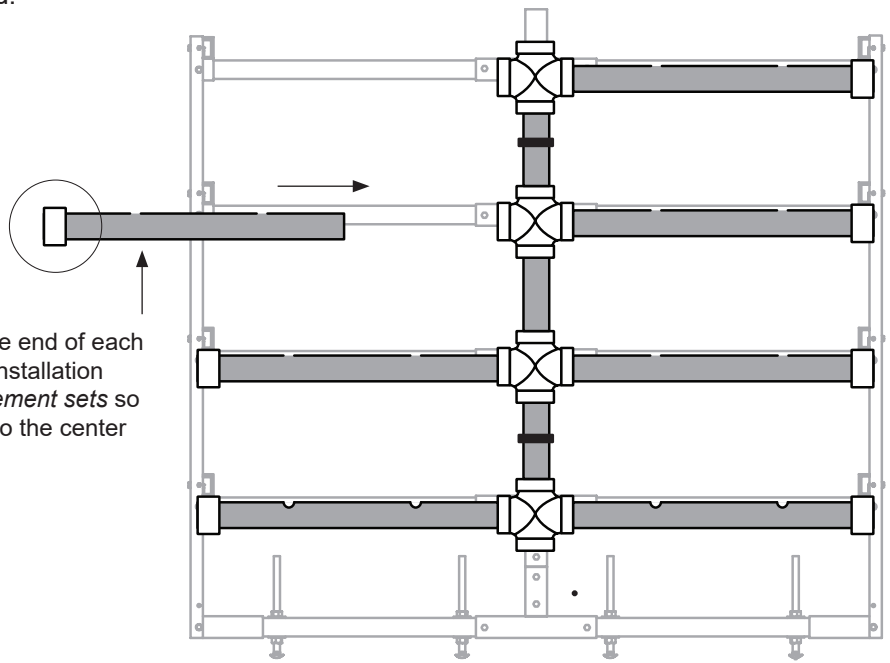

Slightly lift the end of each tube during installation *before the cement sets* so tubes slope to the center tube.

3 ASSEMBLE THE DRAIN MANIFOLD — continued

11. Place the 6' channels on the frame if needed and adjust the entire drain manifold (up or down) to allow the channel drain elbows to be placed inside the horizontal tubes. Tighten the hanger bolts.

    NOTE: Do not set the manifold too high. Verify that the end of each fodder channel remains on the horizontal tubes of the metal fodder frame. *No weight from the fodder channels should rest on the drain manifold horizontal tubes.*

12. If this has not been done yet, assemble and install the remaining 111906 Sammy, 111907 hanger, 3/8" threaded rod, and 3/8" hardware to secure the lower tube to the main frame.

13. Install the upper tube and cap and the lower tube, drain end elbow and extension to complete the drain manifold. Add primer and cement and secure tubes to cross fittings. ***FOLLOW ASSEMBLY INSTRUCTIONS ON PVC CONTAINERS!***

    NOTE: Angle and use of the lower 90° elbow depends on application. Extension tube is constructed using leftover PVC tube. Additional tubing can be purchased locally, or call your sales representative for additional information. Install this last and after the supply manifold is assembled and attached to the frame.

14. Continue with the installation of the supply manifold.

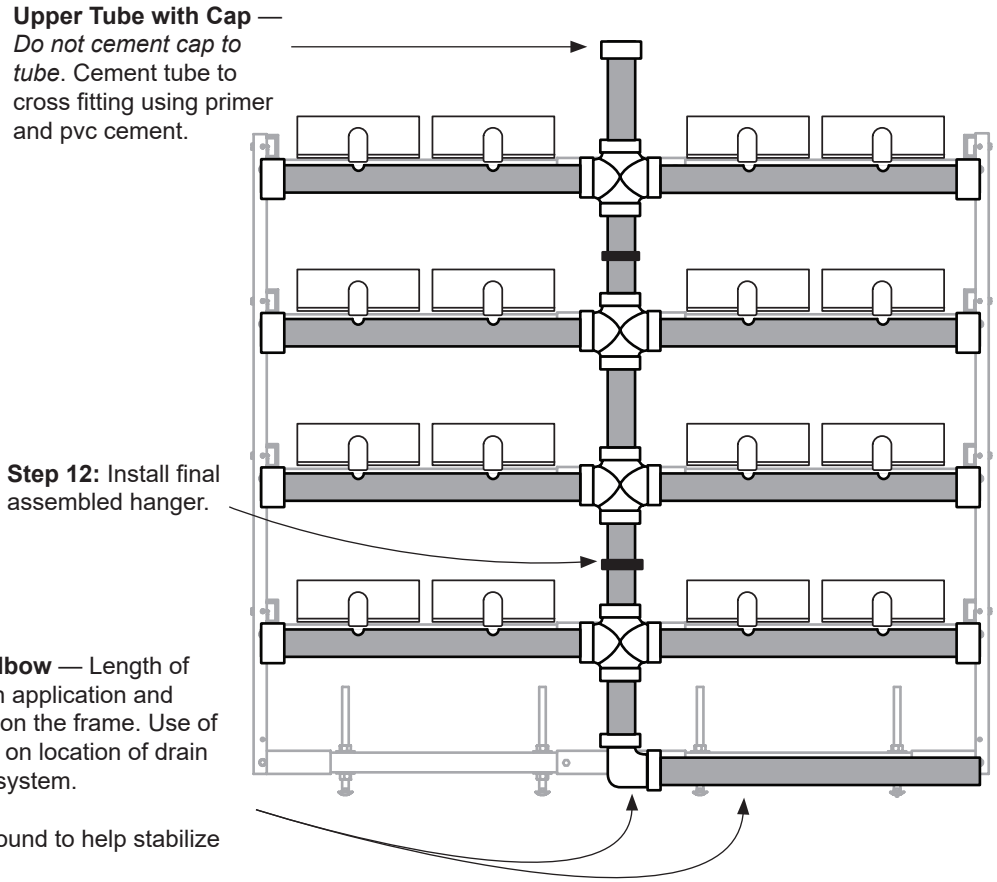

4

INSTALL THE SUPPLY MANIFOLD

Required parts:

- (8) 112305 (18" Supply Tube w/ Micro Valve)
- (8) 112306 (28" Supply Tube w/ Micro Valve)
- (1) 112527 (3/4" PVC Supply Manifold)
- (3) 106808 (3/4" Pipe Hangers)
- (2) FA4472B Tek Screws and Magnetic Nut Setter (5/16" x 2-9/16")

Complete these steps to attach the supply manifold to the frame:

1. Move to the supply end of the frame and attach one (1) 106808 pipe hanger to the frame in the locations shown. Secure each hanger to the frame using one FA4472B Tek screw and the magnetic nut setter. *Circles identify hanger position on frame.*

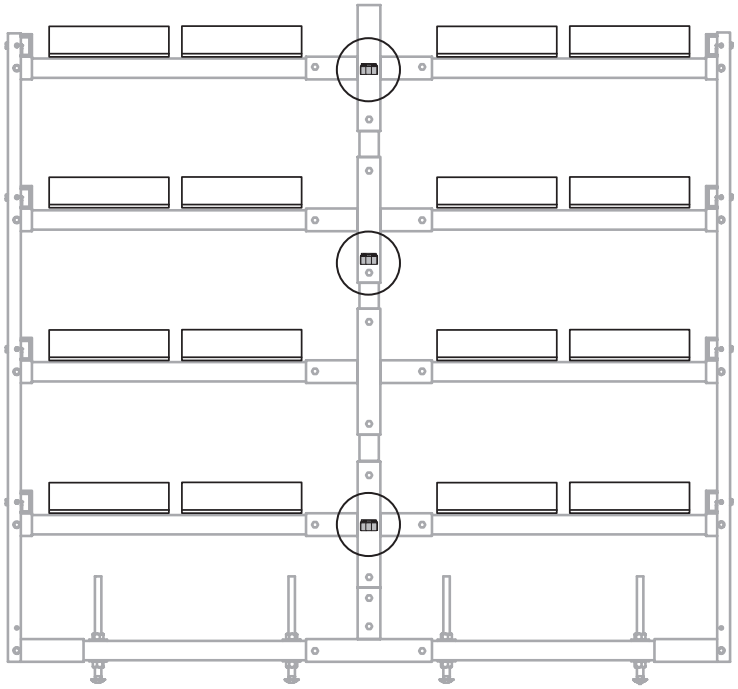

In the locations shown on the diagram (lower-left), predrill a mounting hole using an FA4472B Tek screw.

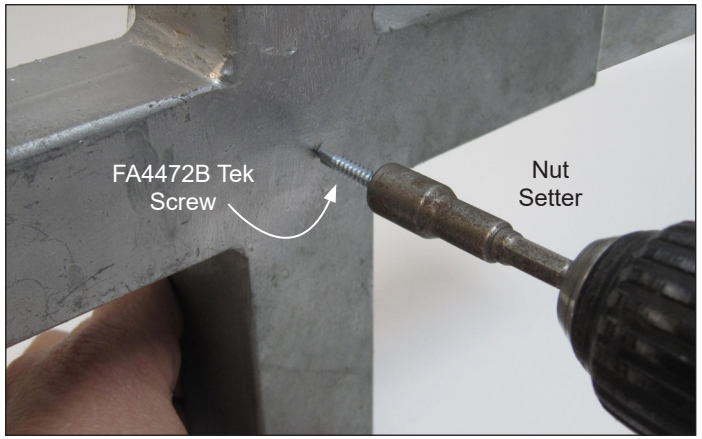

Slide the 106808 hanger over the Tek screw and attach to the frame.

Before the screw is tight, align the hanger on the frame as shown to prepare for the manifold installation. Tighten the screw.

Repeat to install all remaining 106808 pipe hangers.

4 INSTALL THE SUPPLY MANIFOLD — continued

ATTENTION: Handle the supply manifold carefully during installation to prevent damage to the supply tube fittings! These can break if handled improperly! Actual manifold and system may differ from what is shown.

2. After attaching all pipe hangers to the frame, take the 112527 3/4" PVC supply manifold and position it against the installed hangers.

   NOTE: This procedure shows attaching the manifold to the frame before adding the supply tube assemblies. These tube assemblies can be installed before you secure the manifold to the frame. Steps 3 and 4 describe the installation of the supply tubes.

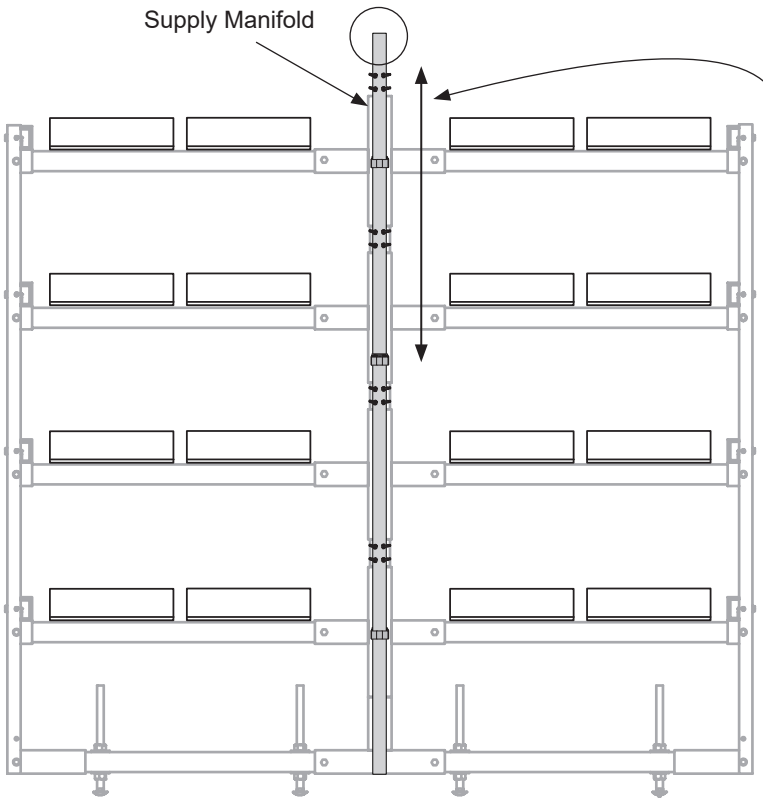

STAND-ALONE UNIT ONLY—If you are attaching the main water line at the bottom, slide manifold up during installation to provide the needed clearance, or trim to length as needed.

Trim top of manifold if desired and cement the WF2990 slip cap in place with PVC primer and cement.

4

INSTALL THE SUPPLY MANIFOLD — continued

Gently grip the manifold near a hanger and push toward the frame to lock the manifold in the hanger. Repeat this at each hanger.

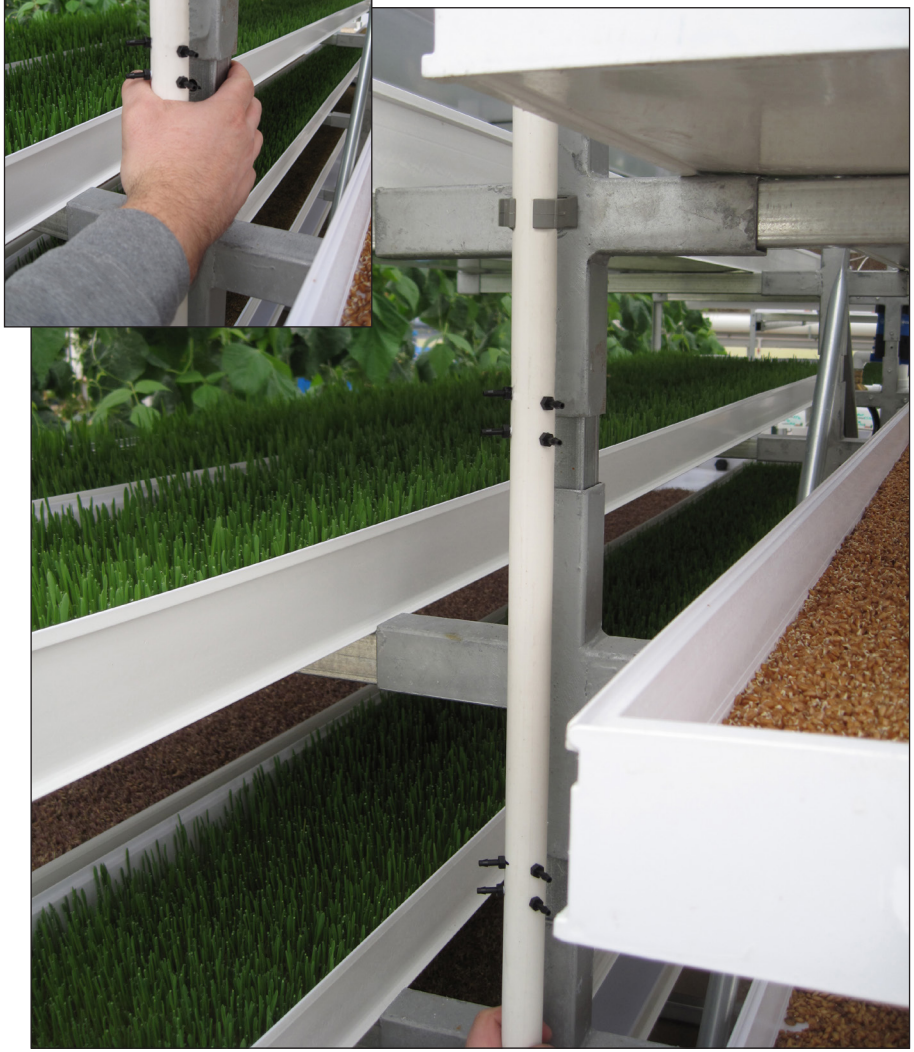

ATTENTION: Handle the supply manifold carefully during installation to prevent damage to the supply tube fittings! These can break if handled improperly!

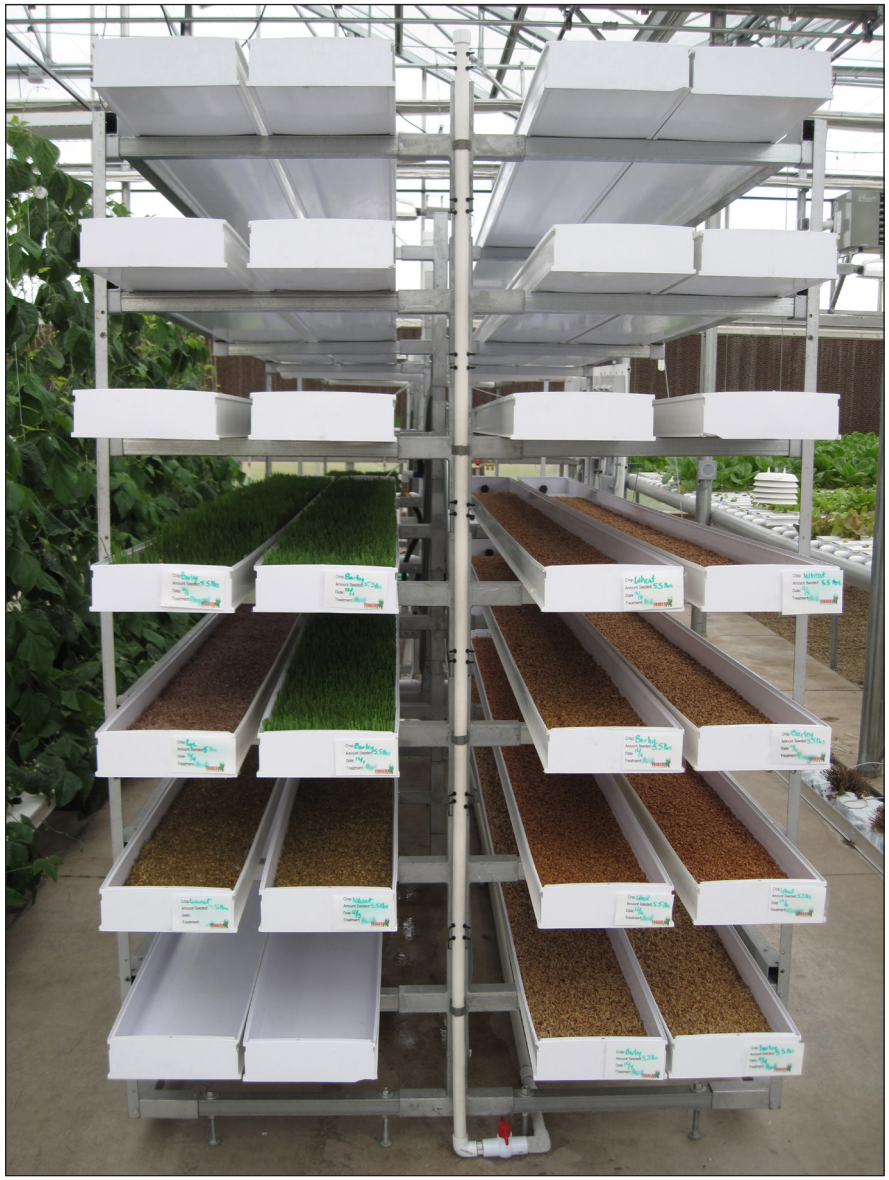

Sample fodder system is shown. Actual system may differ.

4 INSTALL THE SUPPLY MANIFOLD — continued

3. Next, locate the supply tubes with micro valves. There are two different lengths for this fodder system–112305 (18") & 112306 (28").
4. Install two (2) short tubes (112305) and two (2) long tubes (112306) at each level as shown.

ATTENTION: FITTINGS ON MANIFOLD CAN BREAK! DO NOT FORCE THE TUBES ONTO THE MANIFOLD FITTINGS! WET THE END OF EACH TUBE BEFORE INSTALLATION AND GENTLY SLIDE IT EVENLY OVER THE FITTING.

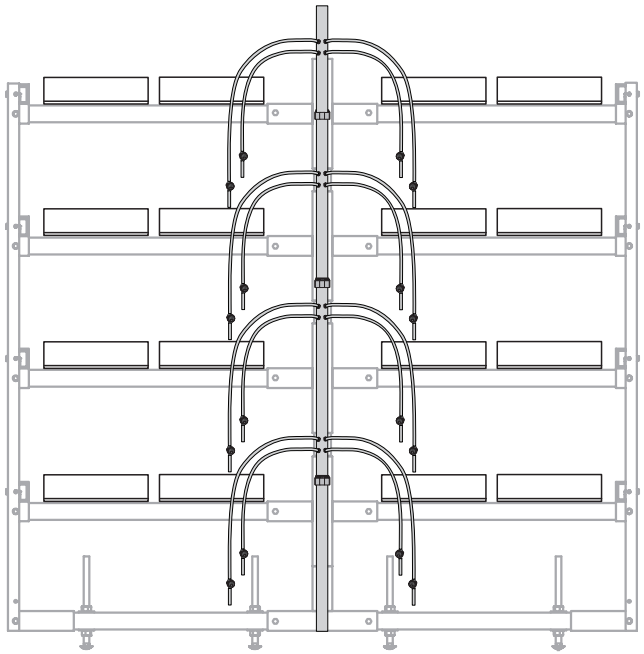

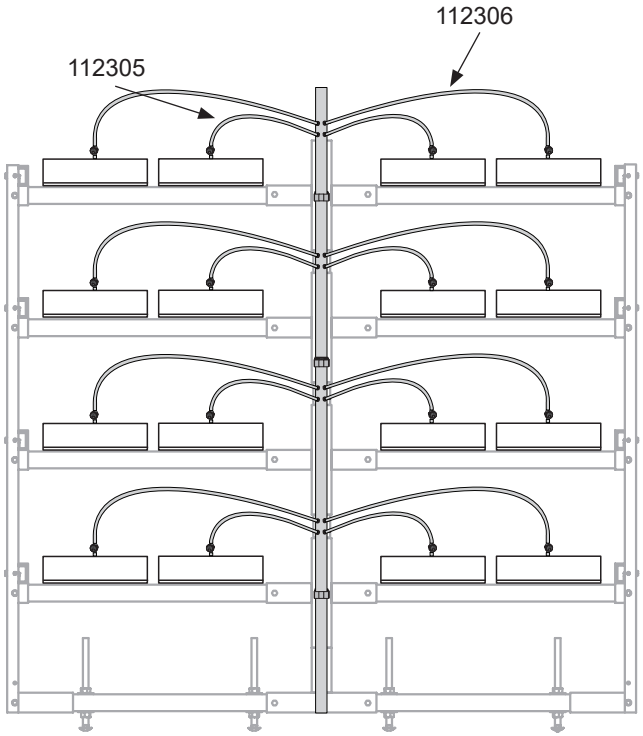


Wet the end of the supply tube.


Gently slide it onto the fitting.


Repeat for all remaining supply tubes.

5

SET THE PROPER SLOPE (3"- 4") OF THE FODDER FRAME

To ensure that water flows through and properly drains from the fodder channels, a ***3"- 4" slope toward the drain end*** of the system is required. Frame must also be level from side-to-side when viewed from the end.

The 111628M fodder frame is equipped with three (3) sets of levelers—one set at each of the vertical frame assemblies. *The following steps assume the fodder system is setting on a level surface.* If the system is on a sloped concrete pad for example, adjust the following steps as needed to achieve the ***3"- 4" slope***. Depending on the slope of the floor, it is possible that the levelers will be used to simply level the frame from side-to-side. See Fig. 1.

ATTENTION: Too great a slope can cause the seeds to wash toward the drain end of the channels. Levelers are designed to adjust for minor or slight variations in the site. **For safety, a level site is required!** When adjusted properly, all levelers must touch the floor to stabilize the frame. Tighten the locking nuts to maintain the adjustment and to lock the levelers to the base rail.

Depending on the site, it may be necessary to remove the four (4) leveler bolts at the drain end (or low end) of the frame to achieve a 3" to 4" recommended slope.

Photo shows the levelers as attached to the base rail of the end frame. *Actual bolt may differ.*

Figure 1

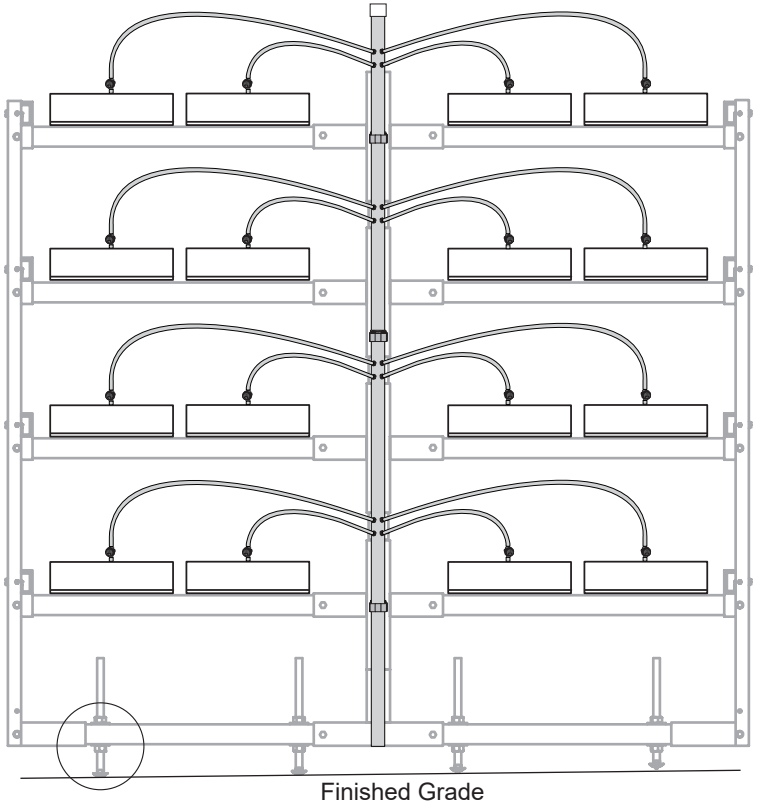

Drain End of the Frame

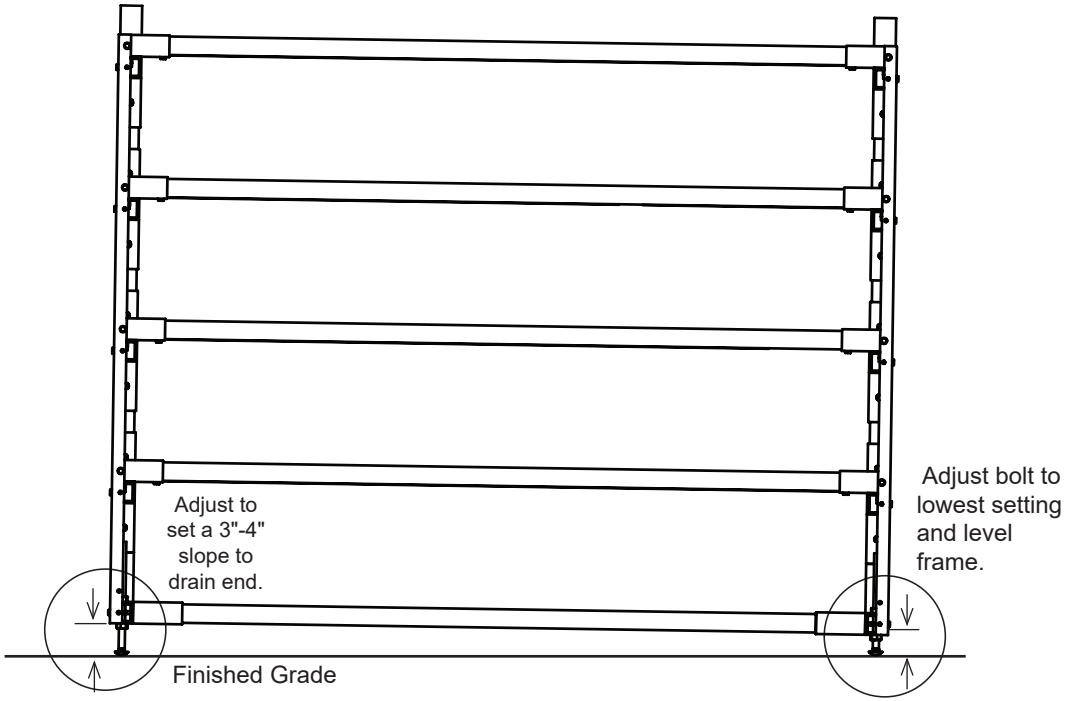

6 TEST SUPPLY MANIFOLD AND CHECK FOR LEAKS

Complete these steps:

1. Verify that the lower drain tube of the drain manifold is positioned to direct water to the required floor drain.
2. Check all supply tubes with micro valves and verify that the 3" extension tube is inserted into the drilled hole of each 111030 end cap. See page 16.
3. Attach the main water supply line to the supply manifold. Main supply line can be attached to the top or bottom of the supply manifold—***single, stand-alone fodder system only***.

   ATTENTION: Supply line must include the following additional customer-supplied components: timer, in-line pressure regulator, pressure gauge, on-off solenoid, and water meter (optional). Additional plumbing fittings and electrical components are needed to connect the timer and solenoid and to connect the supply line to the center stack of fodder supply manifold. Contact your sales representative with your list of the required fittings specific to your main water supply line. See the diagram on Page 3.
4. After attaching the main water supply line, verify that the micro valve in the supply tube to each fodder channel is fully open and turn on the water.
5. Allow air to bleed from the system until water flows freely from each of the supply tubes.
6. Close all valves and inspect the supply manifold and supply tube assemblies for leaks. Occasionally micro valves may leak. Most seal after a few water cycles. Twist the on/off knob back and forth to help seat the valve. Do not use pvc cement or other sealants when attempting to stop a leaky micro valve in a supply tube. Doing so may damage the valve.

7. If leaks are found in areas other than a micro valve, mark the leak location. Turn off the water, dry the fitting or end cap, and seal using pvc cement or adhesive. Allow the area to dry according to the directions on the adhesive container, and recheck.
8. After checking the system for leaks, continue reading the information in the Quick Start section to get started growing fodder.

Full Frame View

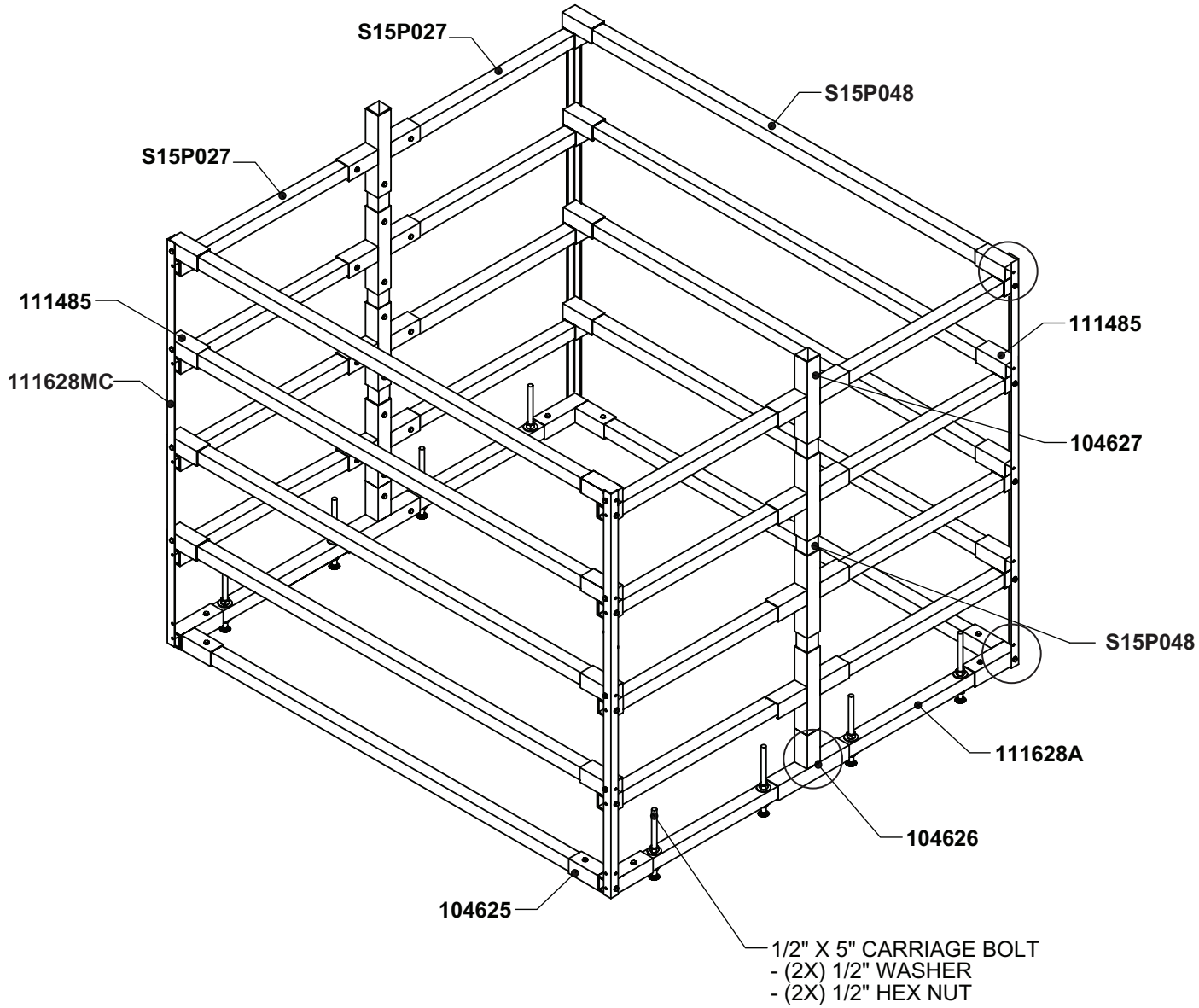

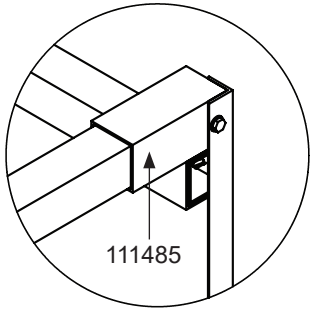

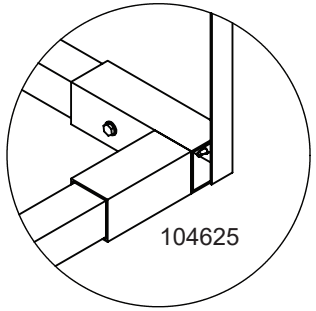

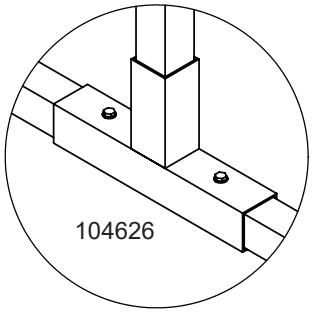

111628M Quick Start Guide: End Frame Assembly

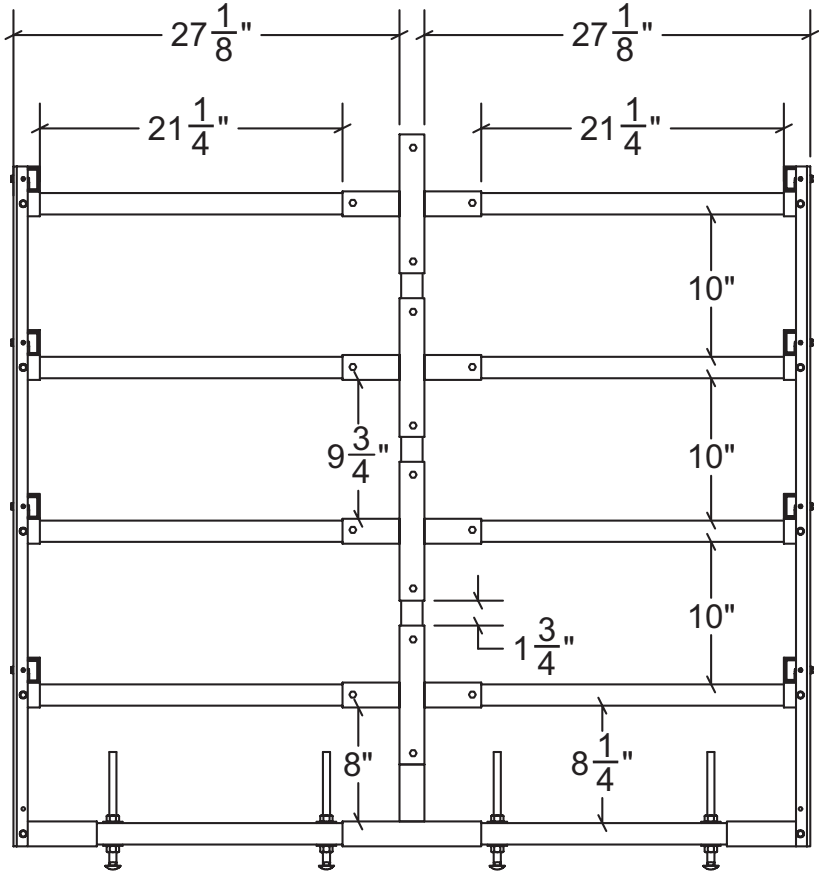

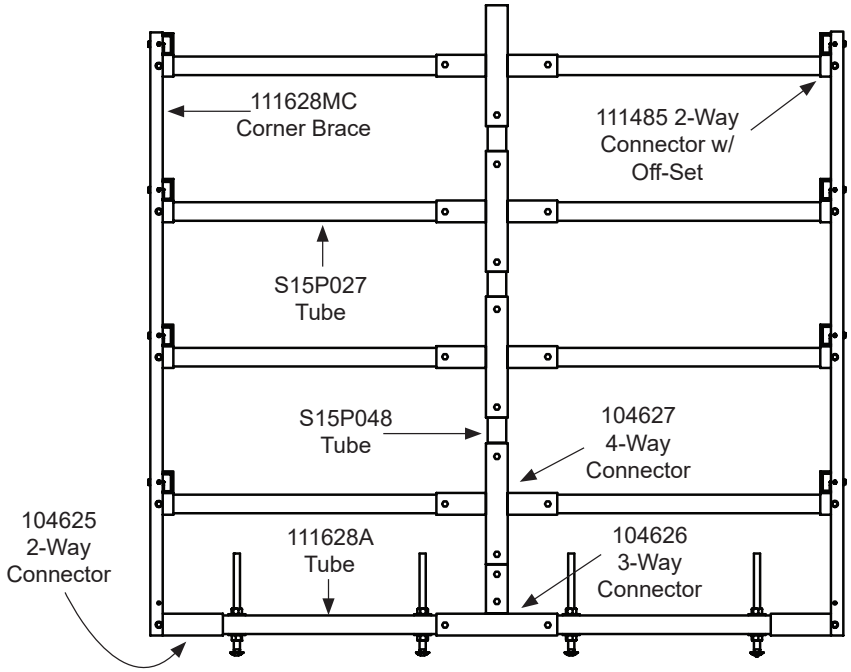

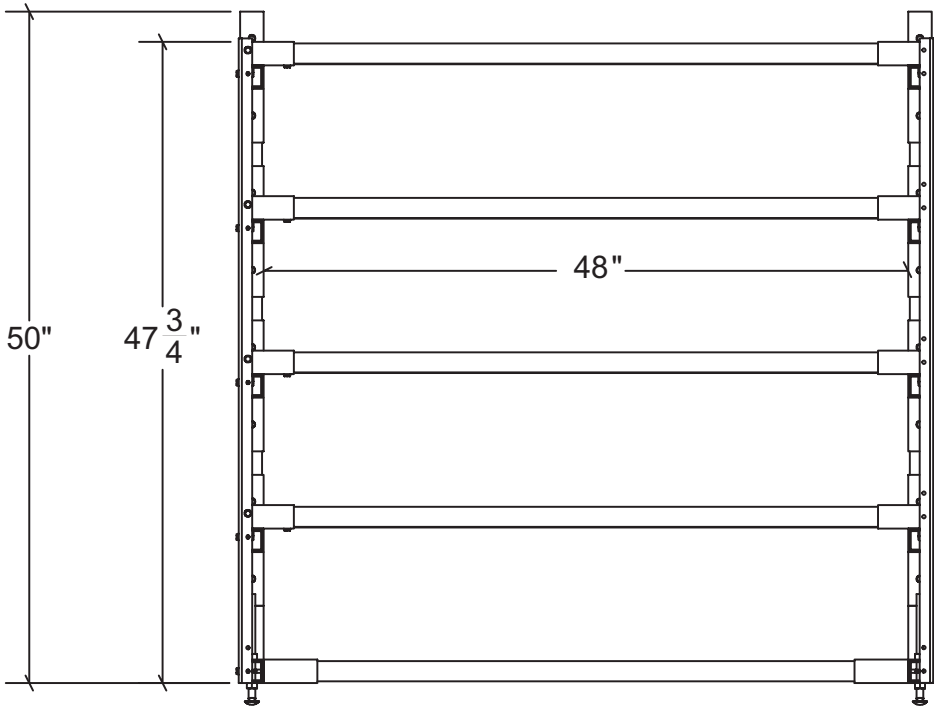

ATTENTION: See Pages 7-9 for additional details.

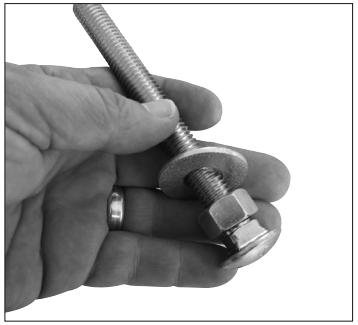

FIGURE 1: Assemble levelers as shown.

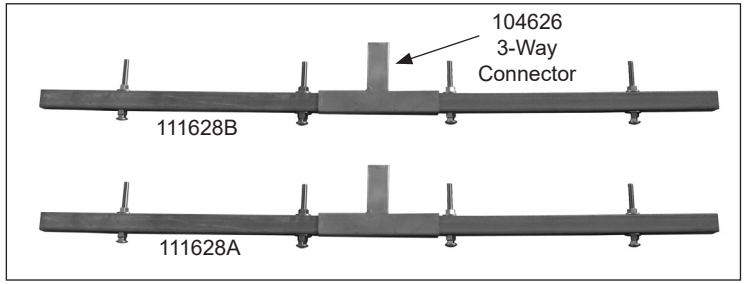

FIGURE 2: Assemble base rails as shown. The 3-way connector is loose at this point. Levelers should be finger-tight to allow for adjustments once the system is assembled and in position.

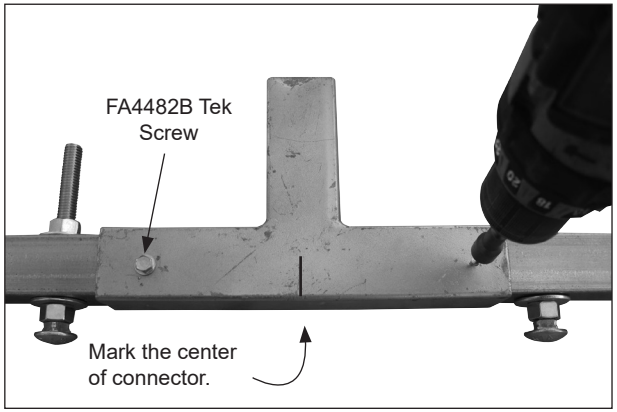

FIGURE 3: Center the connector *on the base rail* and secure using two (2) FA4482B Tek screws.

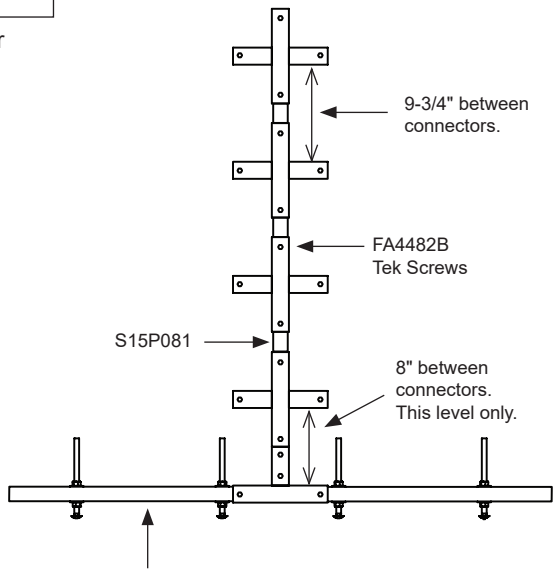

Assembled Base Rail with Levelers

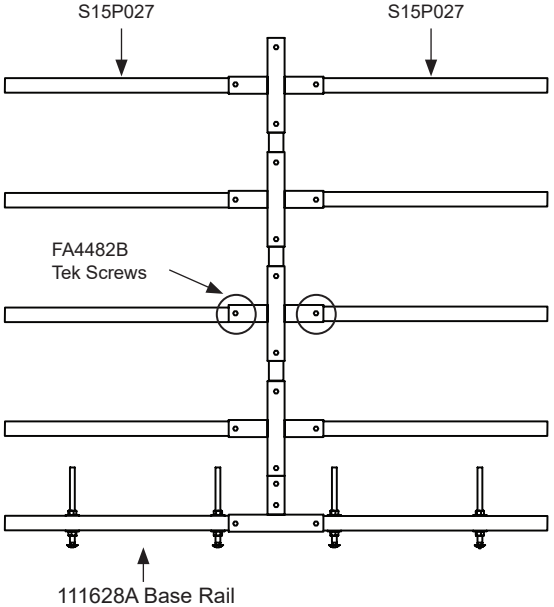

111628A Base Rail

ATTENTION: See Page 10 for additional details.

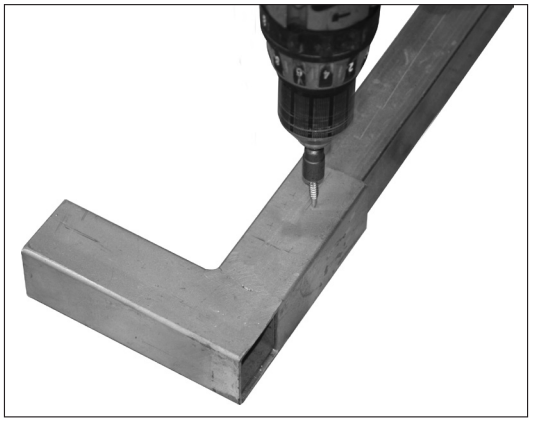

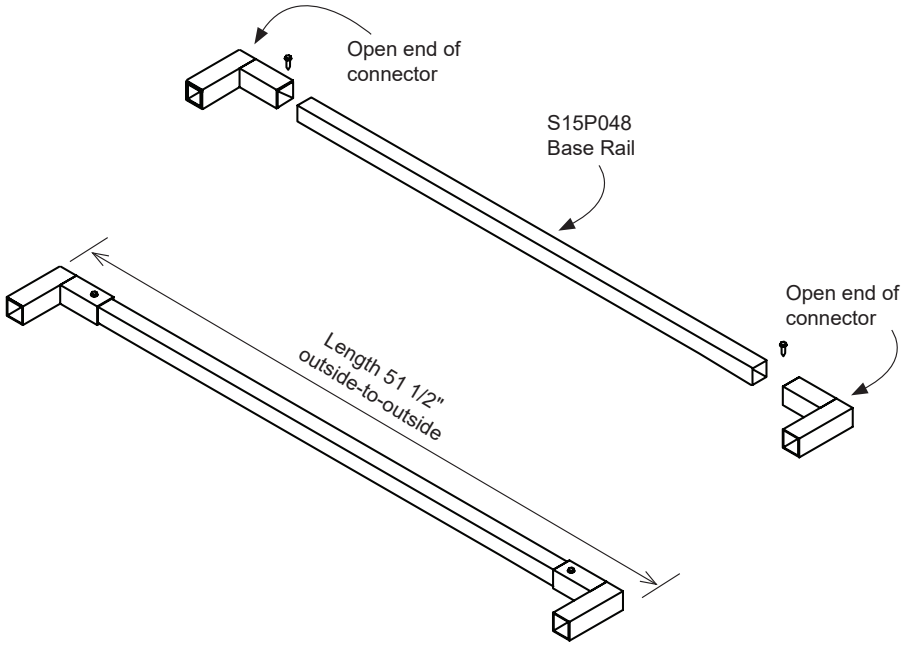

ATTENTION: See Page 11 for additional details.

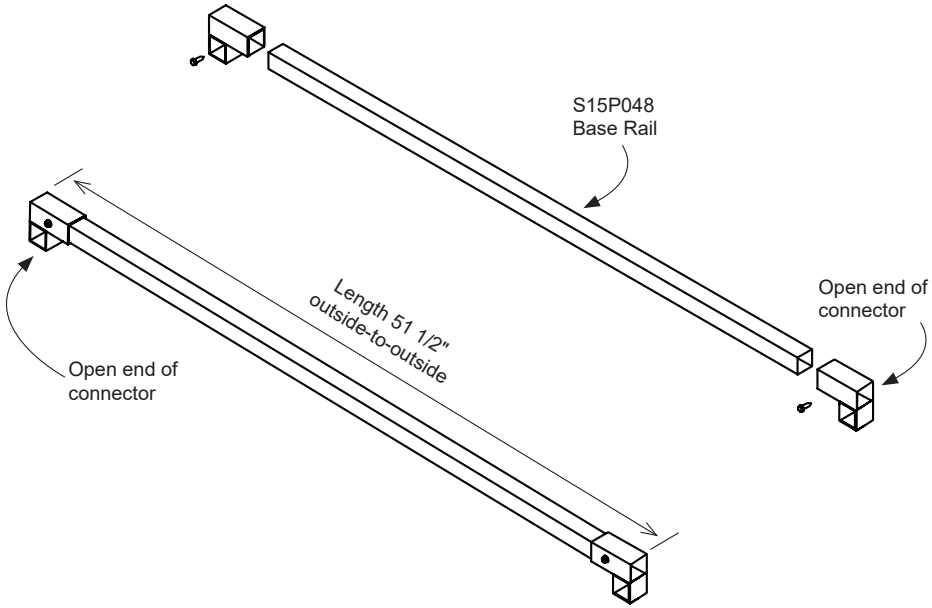

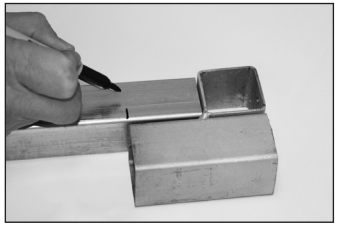

Fig. A: Pre-mark tube for easier assembly.

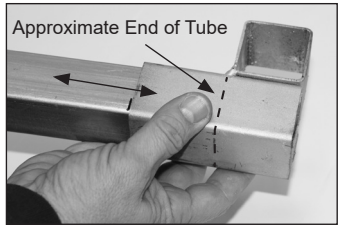

Fig. B: Minor adjustments to the connector position will be require when setting length.

ATTENTION: See Page 12 for additional details.

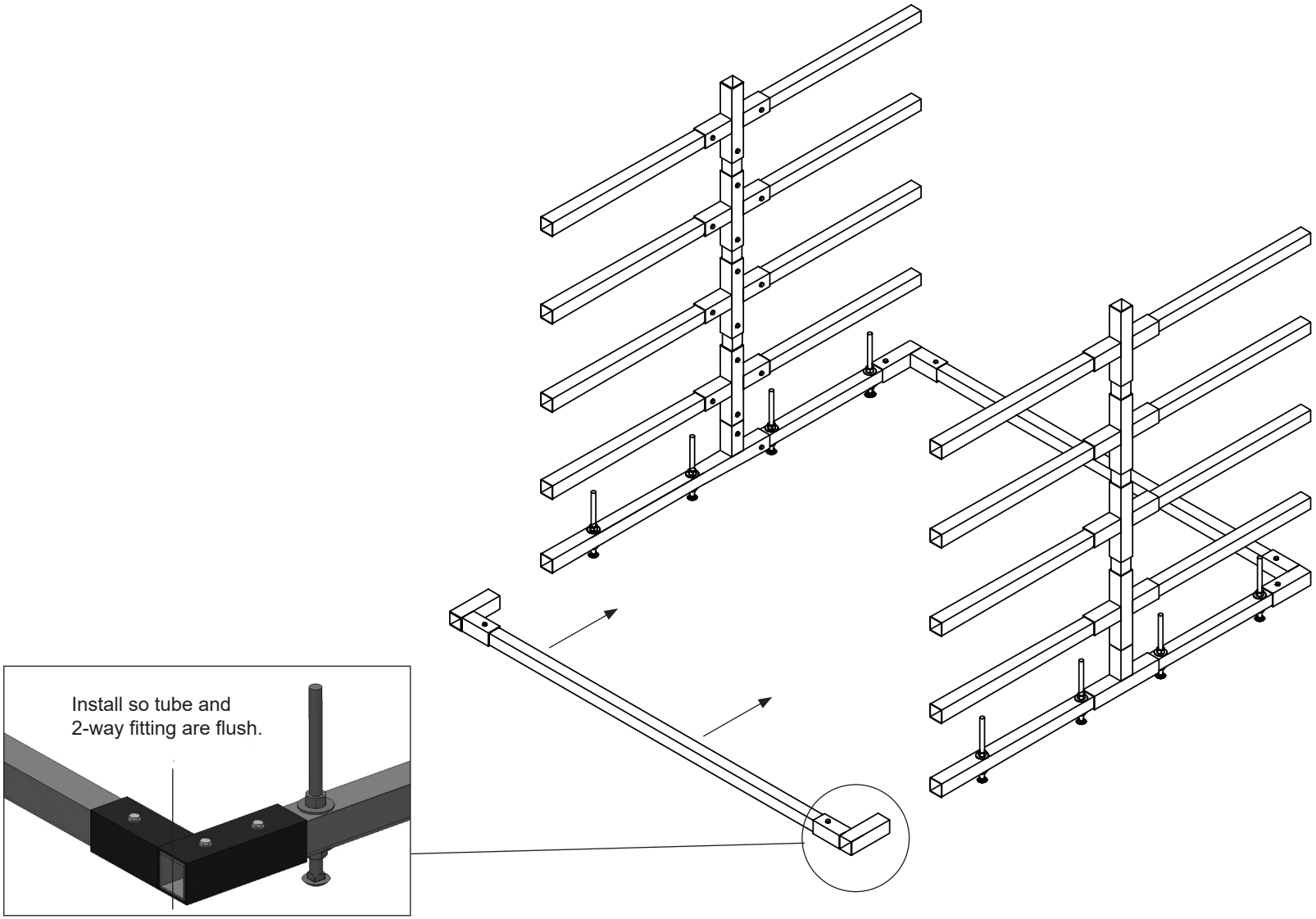

ATTENTION: See Page 13 for additional details.

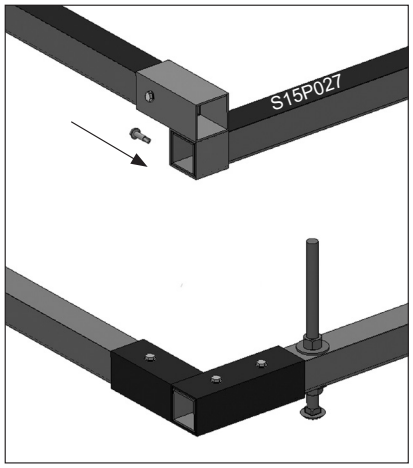

Install Tek screw through fitting and into support arm. Install so support arm is flush to the outside of the 2-way fitting.

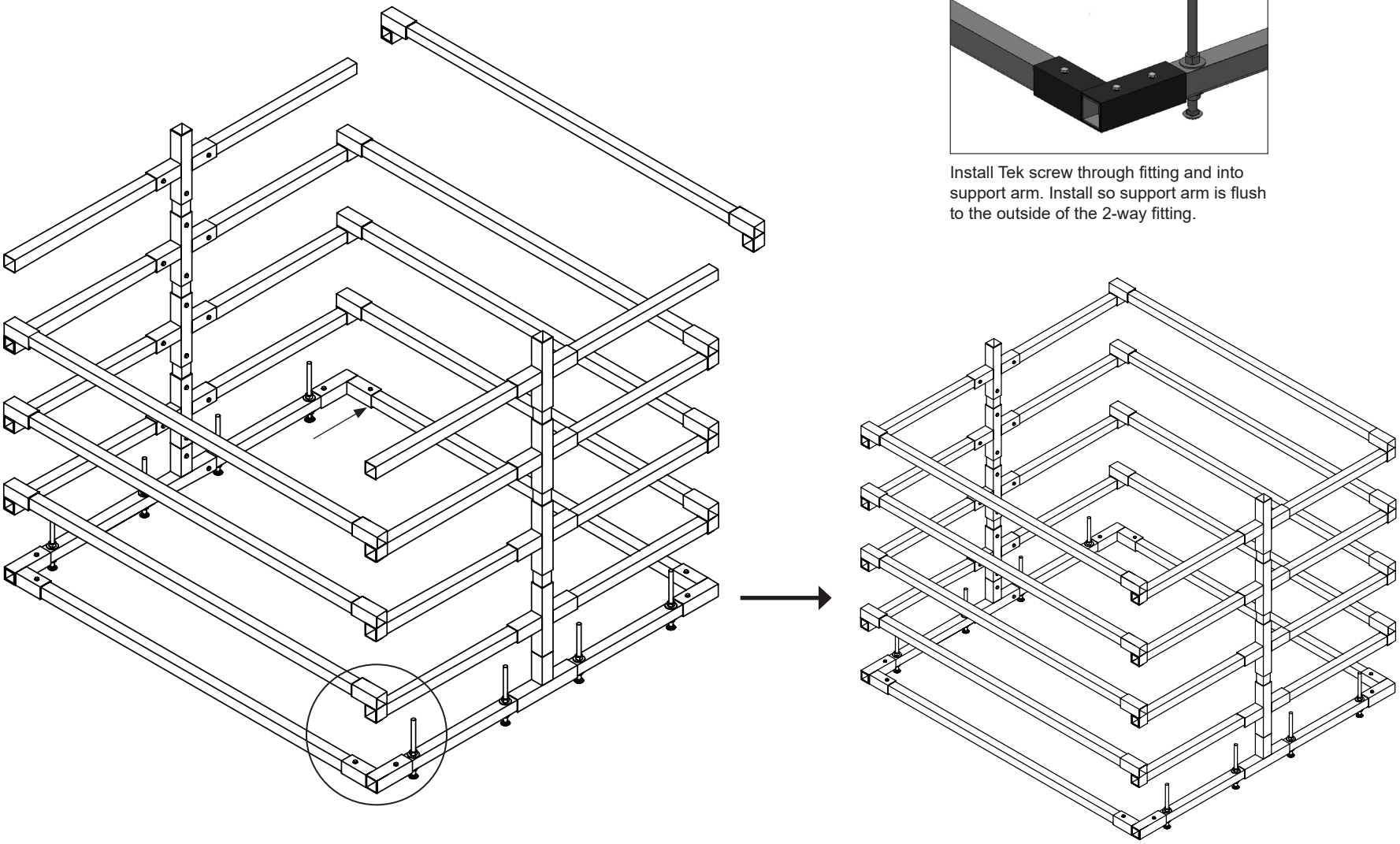

ATTENTION: See Page 14 for additional details.

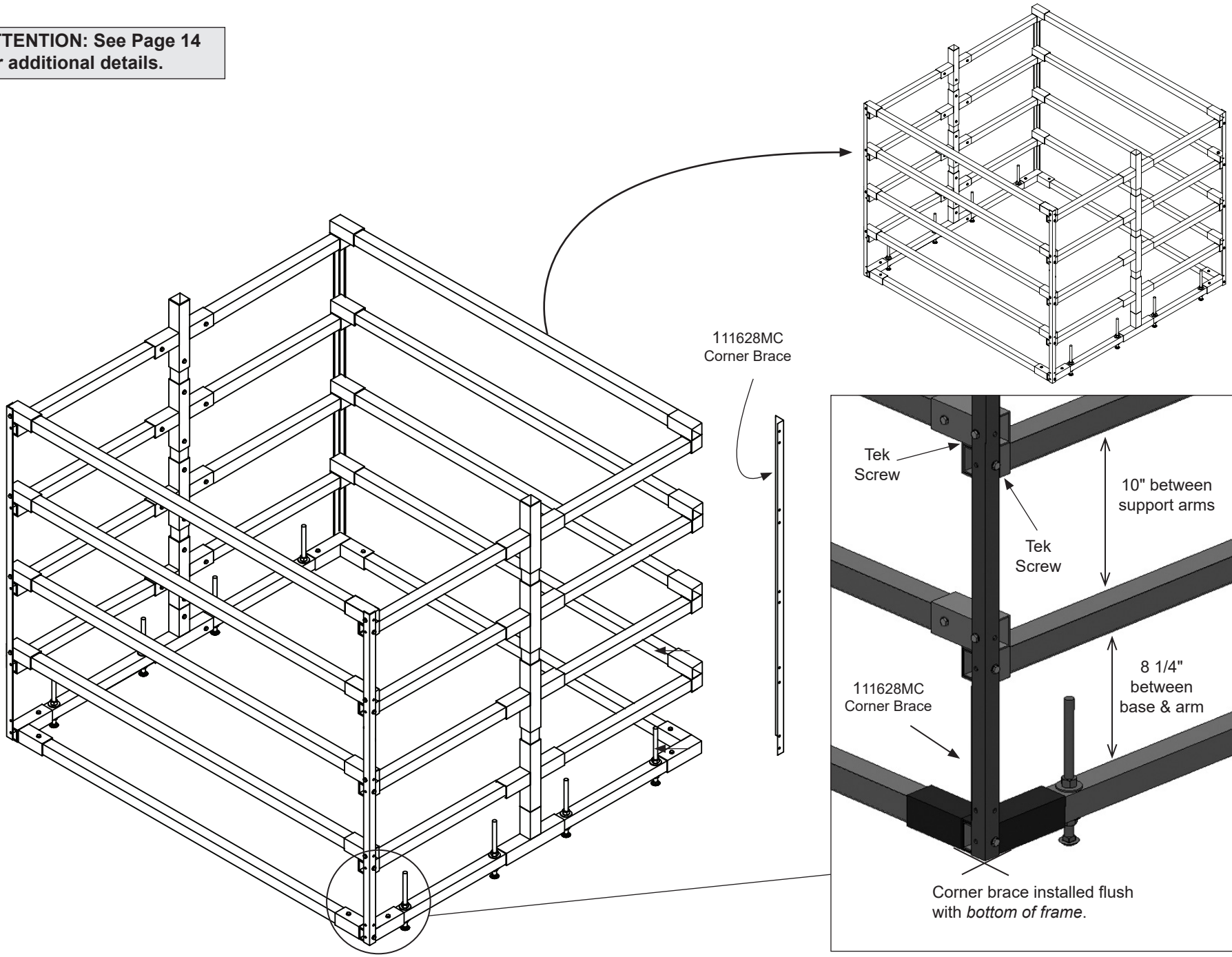

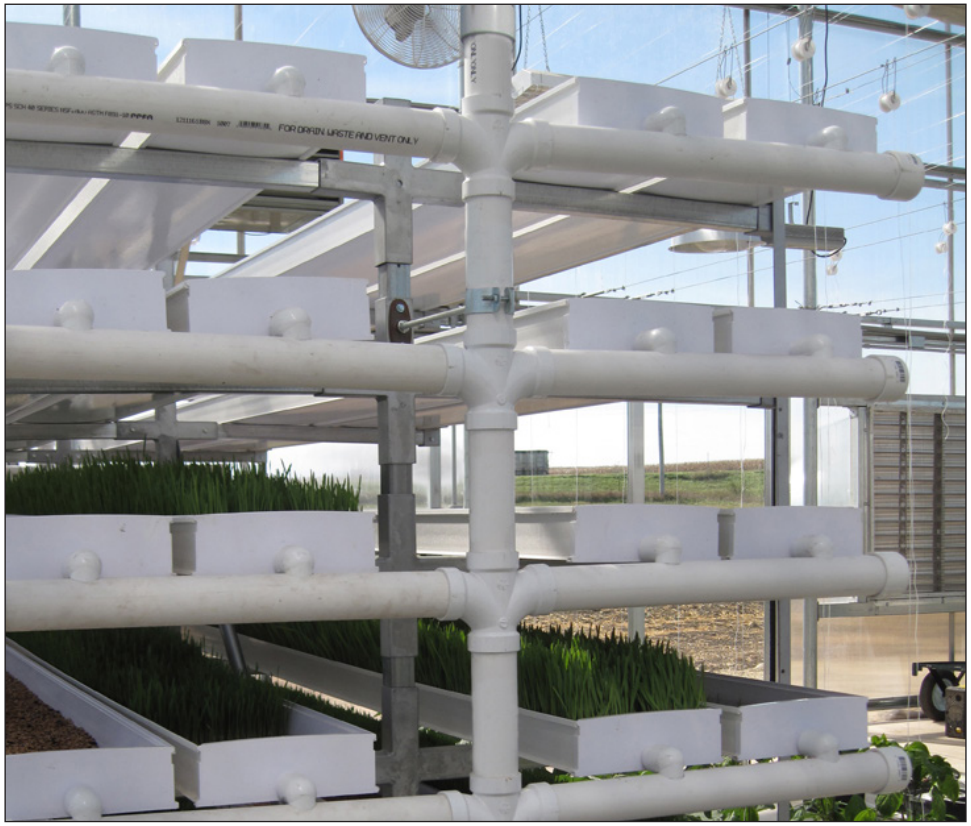

Photos on this page show the assembled drain manifold as attached to the frame. (Manifold can be assembled on a flat surface and then attached to the frame to allow easier adjustment of the manifold height on the frame if desired.) Dry fit all manifold components before you secure the horizontal tubes to the 111696 cross fittings only. Coat the outside of one end of a tube and the inside of fitting with PVC primer and cement. Slide tube into the 111696 fitting. Gently lift the open end of the tube to create a slight slope toward the center stack. Allow the cement to set and release the tube. Repeat for all remaining horizontal tubes. Install the slip caps. ***Do not secure the slip caps to the ends of the horizontal tubes.*** These must remain free to remove so the horizontal tubes can be cleaned.

ATTENTION: See Pages 17-20 for additional details.

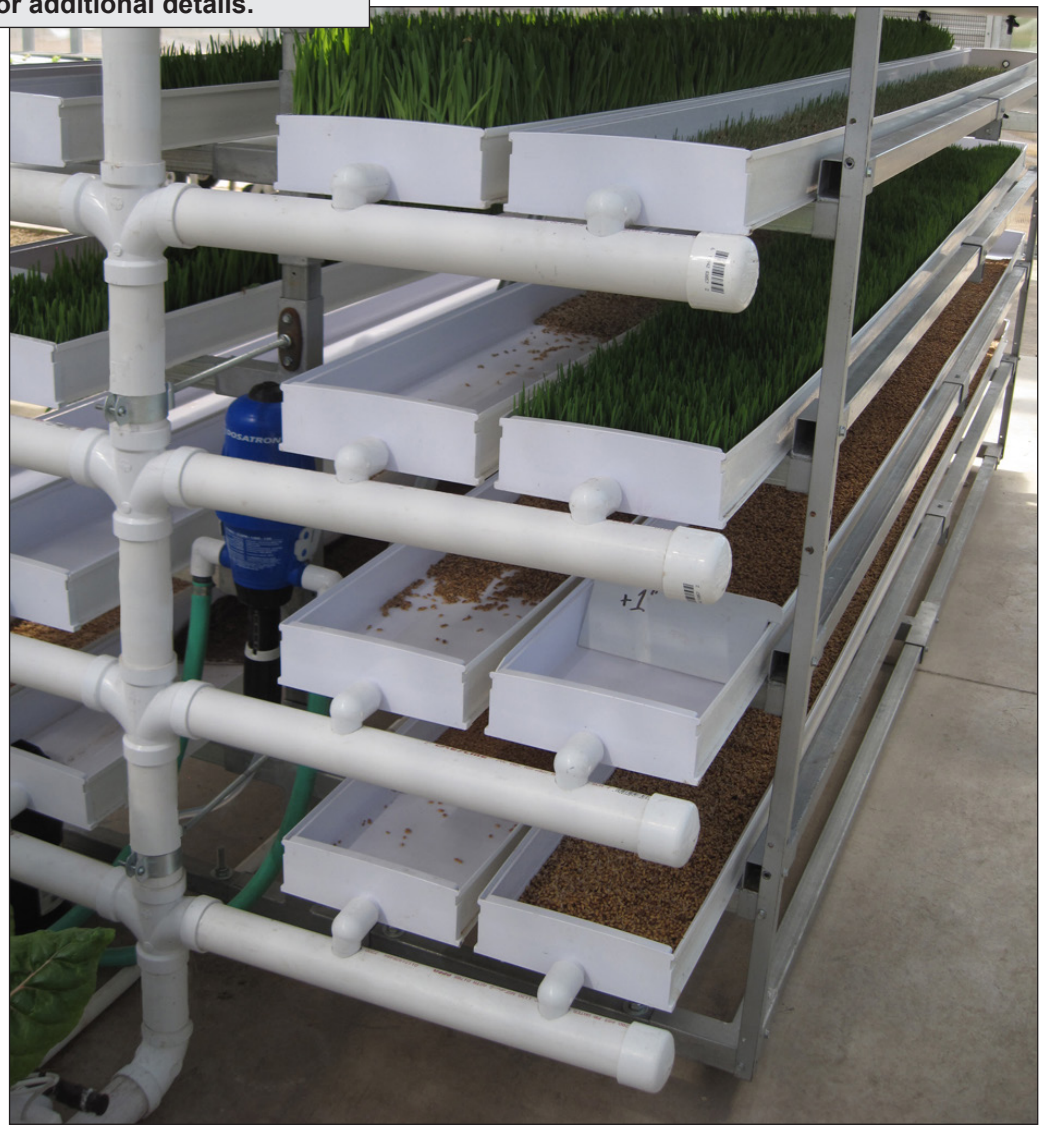

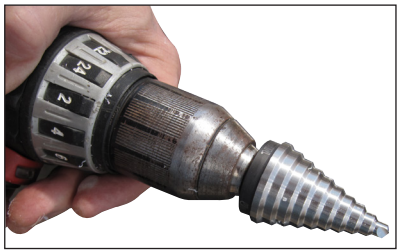

For best results, use a step bit if available to drill the holes in the pvc tubing.

Drain Manifold

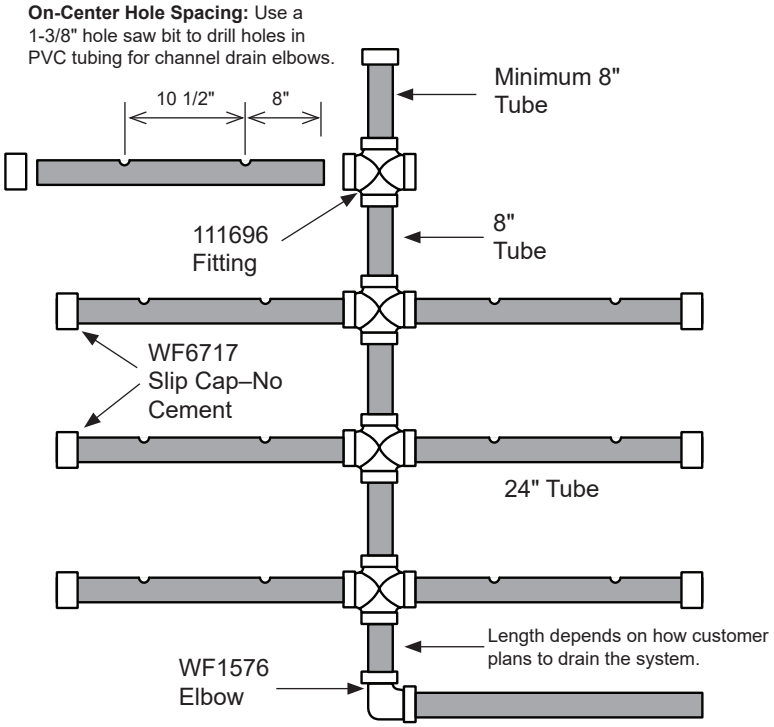

NOTE: Do not cement any WF6717 slip cap to tubes.

ATTENTION: See Pages 21-24 for additional details.

Slide the 106808 hanger onto the Tek screw and attach to the frame.

Hanger locations are circled in the diagram below.

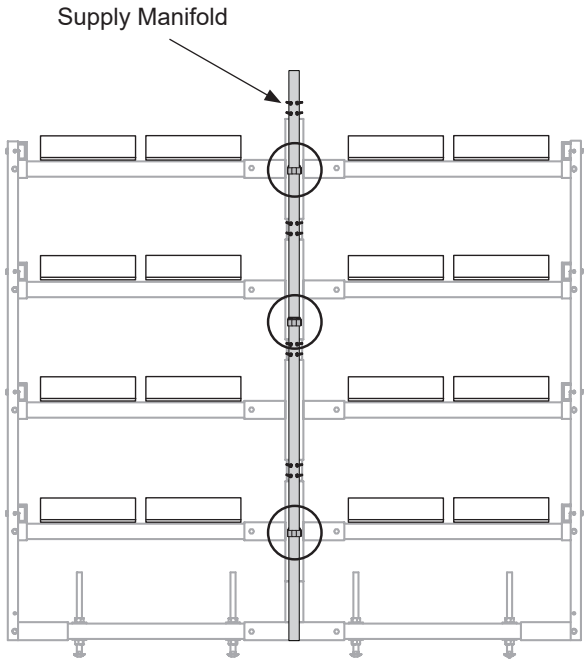

1. Attach hangers and manifold to frame.

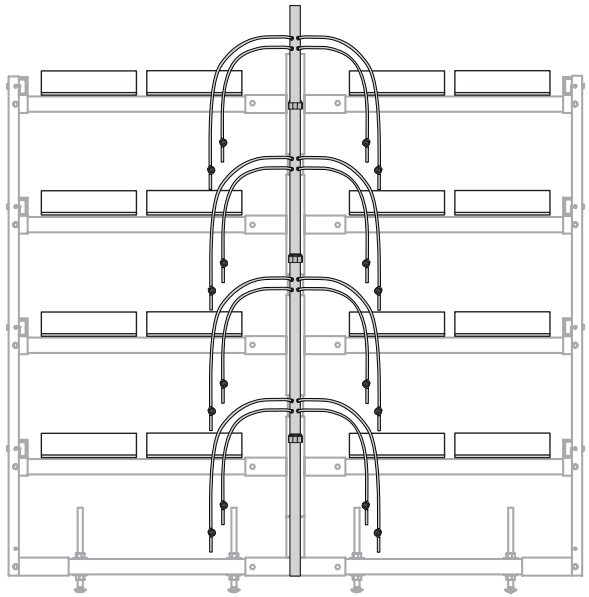

2. Attach supply tubes to manifold.

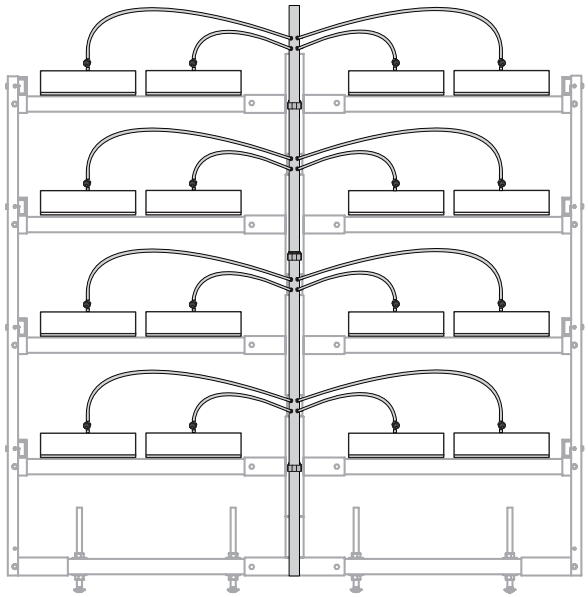

3. Slide tube ends into 111030 end caps.

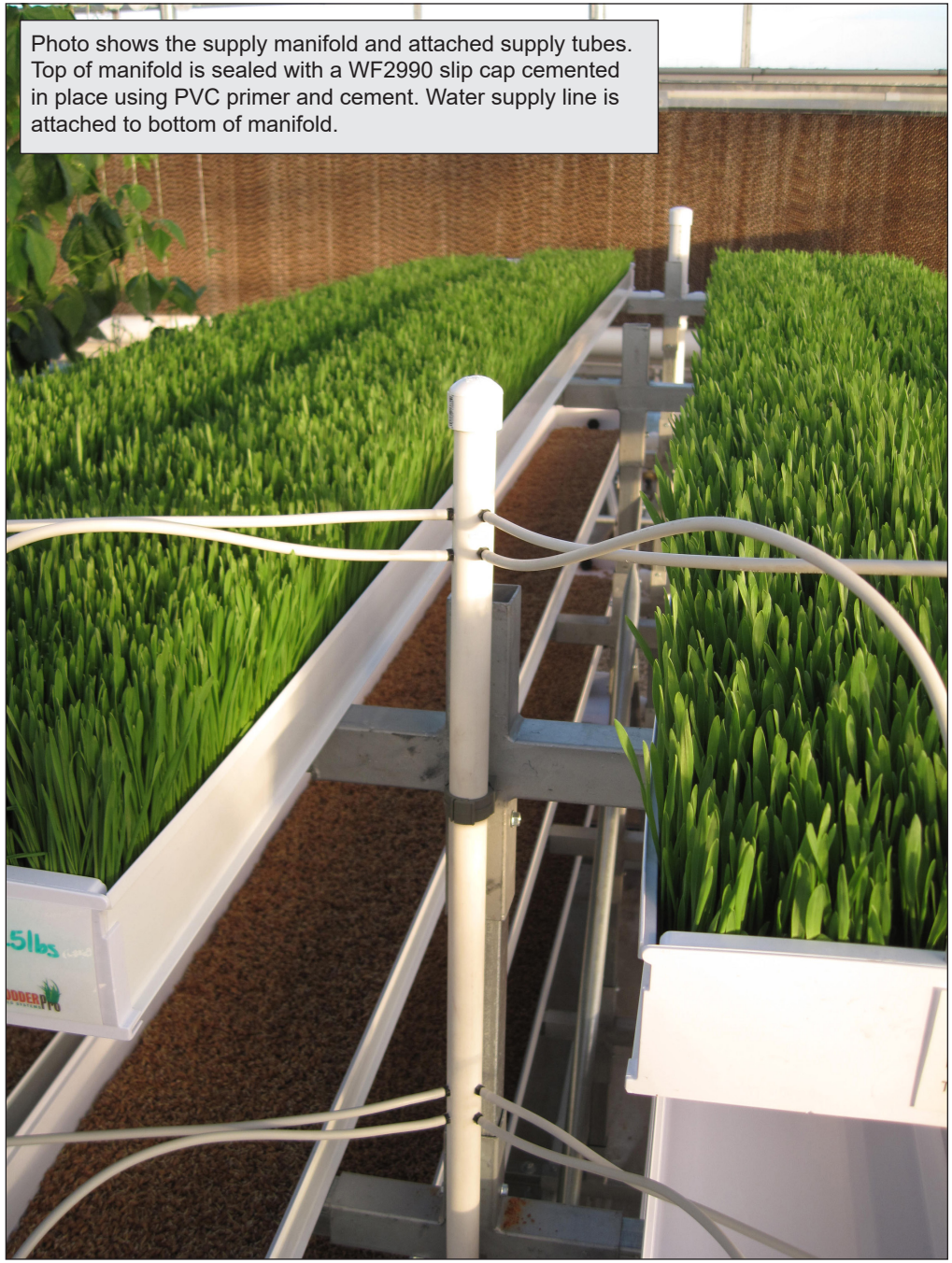

Photo shows the supply manifold and attached supply tubes. Top of manifold is sealed with a WF2990 slip cap cemented in place using PVC primer and cement. Water supply line is attached to bottom of manifold.

*Actual fodder system may differ from what is shown in these sample photos.

Photo above shows the supply tube and micro valve as installed in the 111030 end cap. View shows the inside of a fodder channel.

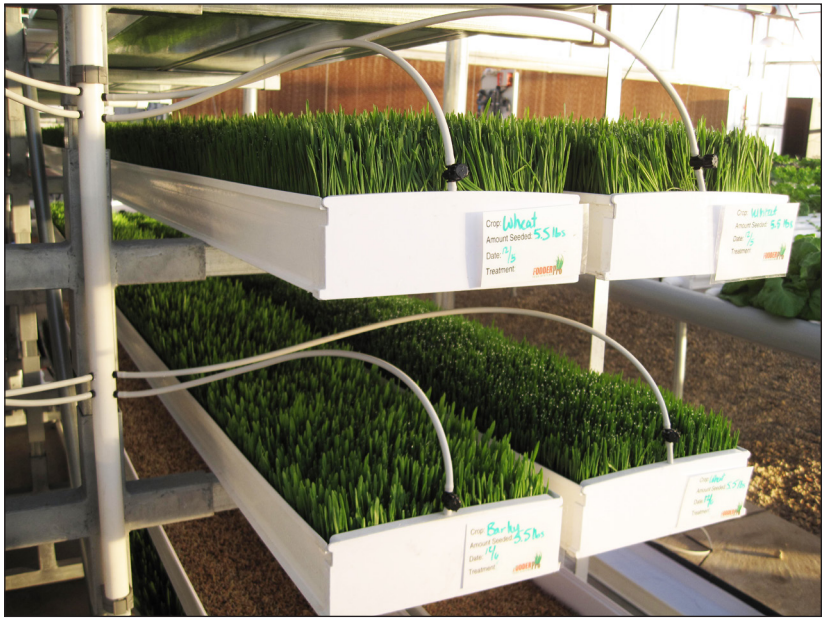

Photos shows a section of a working fodder system. The supply manifold and supply tubes are shown. Actual fodder system may differ.

INSTALL THE 111303 SEED SCREEN

The 111303 seed screen is designed to help prevent seeds from washing into the drain manifold and floor drain. Before spreading the soaked seed into each channel, insert a screen into the outlet of each fodder channel as shown. Screen is held in place by friction and is not threaded into the outlet.

Remove the screen before you harvest the fodder to prevent loosing it. Screen can be cleaned with the same bleach solution used to clean the fodder channels.

Slide the screen back into the channel once it has been cleaned.

111303 Seed Screen

Basic Maintenance

The fodder system requires regular maintenance and cleaning. The duration between the maintenance and cleaning sessions, however, depends on how and where the system is used and what seeds are grown. The only way to determine a regular maintenance and cleaning schedule is to closely monitor your system once it is fully functioning. A clean fodder system increases fodder production and reduces loss due to mold and other harmful biological and environmental factors.

Below are a few suggestions to help maintain and clean the fodder system:

- Check all fittings and channels to ensure there are no leaks. Repair or replace damaged parts immediately. Seal all leaks when found.
- Clean and disinfect the fodder channels after each harvest. System is designed so channels can be removed and cleaned. Use a 10:1 mixture (water/bleach) to disinfect the channels when cleaning. Be sure to rinse thoroughly to remove the cleaning solution before using the channels.
- Periodically remove the ends of the horizontal drain manifold tubes and clean the entire drain manifold using the bleach solution mentioned above to prevent unwanted growth of loose seeds, bacteria, fungus, and mold. The entire drain manifold should be disinfected regularly to prevent odor.

General Startup

Many factors must be considered before you begin growing fodder in your new system. One of the best sources of information is the internet. Spend as much time as needed to research how you want to get the most out of your system. Each growing situation and fodder use is unique to the user. To prevent frustration and wasted time, a few hours spent on the internet can save you days or weeks in the field trying to achieve acceptable results.

Remember: To achieve the results specific to your fodder needs, you must experiment using your fodder system and record the results for reference. This will help you to better understand how the system works, what conditions are required to achieve maximum production, and how to adapt and react to changes when these occur.

Here are a few items to consider before you get started:

- What animals (and how many) will eat the fodder?
- How often will you feed fodder to your animals?
- Where will you set the fodder system and what are the environmental conditions of that location?
- Is water and electricity available for the fodder system?
- Is a floor drain near where the fodder system will be placed?
- Is the space large enough to allow easy harvest of the fodder and maintenance of the system?
- Is there enough light (natural or artificial) to help the fodder grow?
- Will you be able to clean and maintain the system as required in the location where the fodder system will be placed?
- What type of seed or grain will you grow?
- Have you found a supplier for your seed/grain?
- Will clean seed/grain be used, or do you plan to clean these yourself?
- How will you store the seed to prevent loss to rodents and pests?
- How will you transport the fodder from the system to the animals?
- Do you have access to products and information to help prevent mold and fungus growth should these occur?

Mold Growth

Controlling mold growth is important if you want to produce healthy and safe fodder. Here's one way to help keep your system mold-free:

1. Purchase bulk hydrogen peroxide (30%) and dilute with water to a 15% solution. Store and handle as instructed on the container!
2. Purchase an injector (see photo below) and connect it to the main water supply line to the fodder system.
3. Set the injector to inject the 15% hydrogen peroxide solution into the water system. Use an injector setting of 1:100 to begin.

IMPORTANT: Mold grows best when heat and humidity increase. To inhibit mold growth, maintain a cool, dry growing environment for the fodder. Frame shown may differ from actual frame.

4. Monitor fodder growth and hydrogen peroxide use and adjust the injector as needed to achieve the best results.

NOTE: Although more time-consuming, a hydrogen peroxide solution can also be applied using a hand or portable pump sprayer if an injector is not used. ***For this method, use a 1% to 3% hydrogen peroxide solution.*** Inspect the sprouts and fodder for signs of mold and spray as needed. ***Clean all channels thoroughly after harvest and before planting.***

General Growing Tips

Despite the factors that must be addressed before you begin using your fodder system, these general tips will help you get started:

- **Water Quality:** Clean water is a must. If you can't drink it, don't use it. If you are not sure about the water quality, have it tested.
- **Water Temperature:** Keep the water temperature constant and in the range suitable for the seed or grain you are using.
- **Quality of the Seed or Grain:** While it may cost slightly more, good quality, clean grain or seed will save time. You won't have to clean the grain, or worry about foreign objects growing in the fodder that might pose a danger to your animals if eaten.
- **Climate Control:** A properly maintained environment is a must. Ensure you have controls in place to automatically control temperature and humidity. Additionally, do not rely solely on automatic equipment; ensure you are physically monitoring the environment daily and make adjustments if needed.
- **Keep the System Clean:** Follow the cleaning guidelines presented in this guide.

General Guidelines to Promote Optimal Growth	
Water Temperature	60° F (minimum) to 75° F (maximum)
pH Level	6.2 - 6.4 (range)
Humidity	40% to 80% (Best in most cases is 60%.)
Ideal Temperature Range	63° F to 75° F

Design Yield Test Using Barley Seed*

The 111628M FodderPro 2.0 Micro System is designed to harvest two (2) 6' GT80 premium channels per day. ***Trial was conducted using barley grain.*** (It is expected that results will vary when different seed is used.) Consult the information that follows to help determine how best to use your system to produce the fodder you will need.

1. Soak the Seed: Seeds were soaked overnight before they were added to the channels and spread to the required uniform depth. For best results, maximum soak time is 24 hours; minimum soak time is 12 hours. Begin with **4.25 to 4.5 pounds of barley seed** per channel. (Note: Seed quality and growing conditions can affect germination rates, yield results, and amount of seed required. Adjust quantity as needed.)
2. Preparation: To begin, seed was divided evenly and spread in two (2) of the channels at a depth of approximately 1/4" with a 1–1 ½" space between the seedbed and the ends of the channel. This allows room for expansion as the seeds swell from the water and ultimate sprouting of the seed mat. It's best to seed the channels all on one level to more easily track.

   After seeding the channels, turn on the water to the first level and begin the cycling process. Monitor the channels to ensure the valves are adjusted properly and to ensure the seed does not dry out. Adjust the timer (number of cycles and cycle duration) and valves as needed.
3. Calculations: Preliminary trials produced approximately 5 lbs. of fodder per one (1) foot of channel. This equals about 30 pounds of fodder *per 6' channel*. Estimated production can be up to 60 pounds of fodder per two (2) channels per day. (Individual results may vary.)
4. Estimated Capacity: Using a typical diet of 2% of the animal's body weight for fodder, estimated feed capacities for the 111628M FodderPro 2.0 Micro System are shown in the table below.

Estimated Feeding Capacity	
ANIMAL BODY WEIGHT	DAILY FEEDING CAPACITY (# OF HEAD)
1,400 lbs	1 - 2
800 lbs	3 - 4
500 lbs	5 - 6
200 lbs	14 - 15
Poultry	575 - 625

***INDIVIDUAL RESULTS MAY VARY.**

111628M Quick Start Guide: Getting Started

The photos on this page show fodder at various stages of growth. The design of the fodder system shown in these photos differs from the 111628M FodderPro 2.0 Micro System. Photos are included for reference only.

Use the following steps as a basic guide to get started. These are general steps; additional steps specific to your planned fodder production may be necessary.

1. Assemble the fodder system, connect the main water supply, set the channels in place on the frame, and test the system. *Timer, regulator, solenoid, and pressure gauge must be installed.*
2. Determine what seed to grow and purchase the seed. Soak the seeds in the soaker bags and buckets for the required time.
3. Using the seed spreader, spread the seed to a uniform depth. ***Consult the Design Yield Test information on the previous page for the 2-channel rotation calculations.***
4. Turn on the timer to supply water to the seeded fodder channels.

   NOTE: The water flow rate and the control of the water depends on many different factors and is accomplished by operating the in-line valves and setting the number of cycles and cycle duration, which are controlled by the timer. Careful monitoring of the fodder system for the first few fodder production cycles is strongly recommended. During this time you can determine when water is needed and how much water is needed. Consult the documentation included with the timer to properly set and maintain the timer. Consult the services of a qualified electrician to install the timer and connect the pump to the timer. Record all settings, temperature, and results to use as a reference for future adjustments.
5. Adjust water flow using the in-line valves. Monitor the flow so that seeds do not wash to the screen end of the channels. As more level of the system are put into production, water valves will need adjusting. Once all levels are in production and the valves have been set, additional adjustments should be minor.
6. Set the timer to control when water is supplied to the channels.
7. Monitor the system and inspect the seeds to ensure that mold is not present. Consult internet data specific to your type of fodder.
8. Continue to soak seeds, load fodder channels, and harvest fodder according to your fodder production plan and schedule.

Photos above show the 107651 bucket and the 111041 soaker bag. Add seed to the bag, set inside the bucket, and add water to cover all seed.

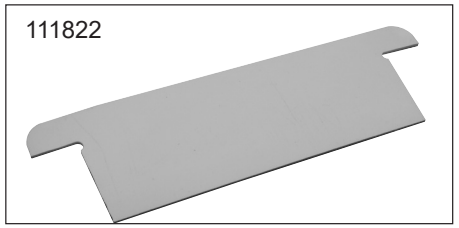

Photos above show the seed as spread in a fodder channel. Photo to the left shows the 111822 seed spreader used to spread the seed in a channel. Tabs are designed to ride on the edges of the channel. Tilt the spreader as needed to achieve the desired seed depth.

Photo shows the seed as it grows in the fodder channel.

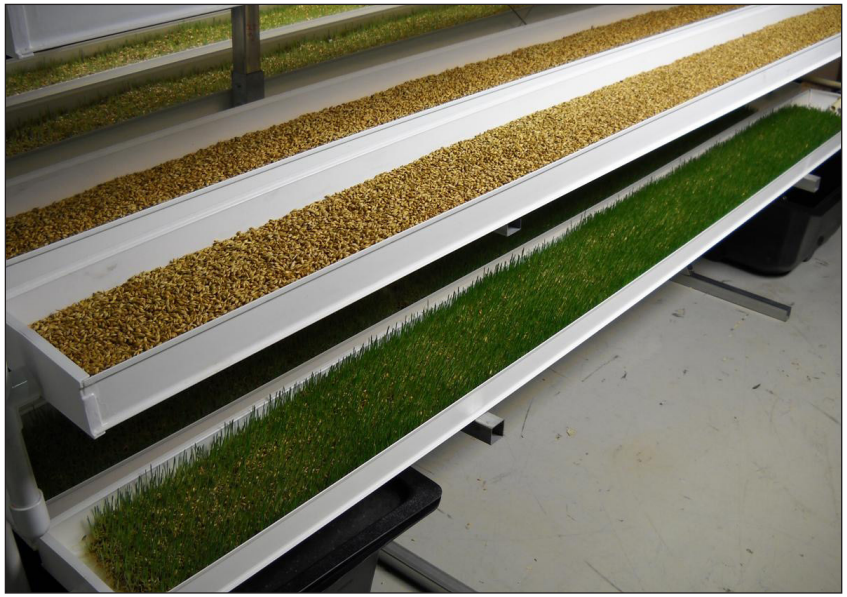

Photo shows the seed at different stages of growth.

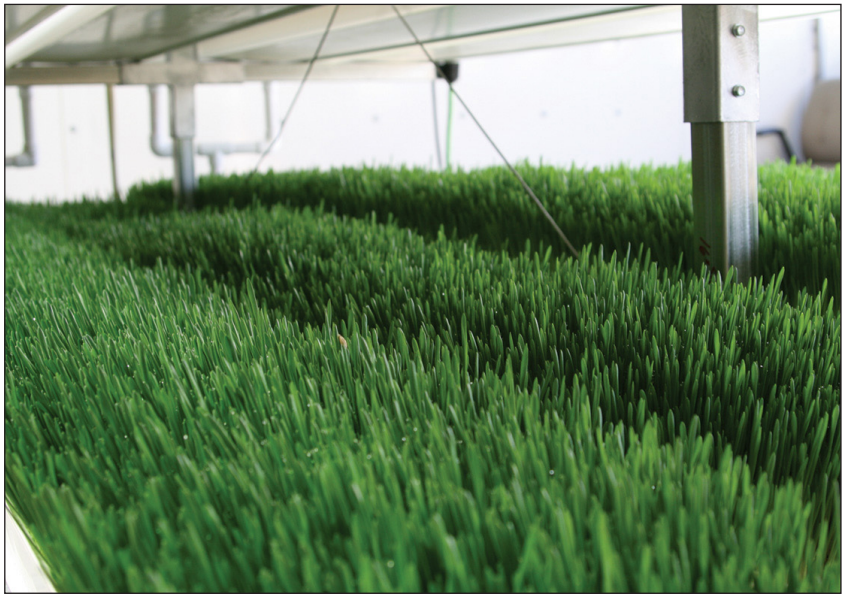

Close-up photos showing seed growth.

Fodder is shown ready to harvest. Remove the fodder from the channel and feed the entire mat to the animals. Clean the channel, reseed, and repeat the process.

Page Reserved for Customer Notes