ClearSpan™ Carport

24' Wide with Polycarbonate Roof Panels

Photo may show a different but similar model.

STK#	DIMENSIONS
105514	24' W x 24' L
105515	24' W x 28' L
105516	24' W x 32' L
105517	24' W x 36' L
105518	24' W x 40' L

Revision date: January 2007ld

YOU MUST READ THIS DOCUMENT BEFORE YOU BEGIN TO ASSEMBLE THE SHELTER.

Thank you for purchasing this ClearSpan™ shelter. When properly assembled and maintained, this product will provide years of reliable service. These instructions include helpful hints and important information needed to safely assemble and properly maintain the shelter. Please read these instructions ***before*** you begin.

If you have any questions during the assembly, contact Customer Service for assistance.

SAFETY PRECAUTIONS

- Wear eye protection.
- Wear head protection.
- Wear gloves when handling metal tubes.
- Use a portable GFCI (Ground Fault Circuit Interrupter) when working with power tools and cords.
- Do not climb on the shelter or framing during or after construction.
- Do not occupy the shelter during high winds, tornadoes, or hurricanes.
- Provide adequate ventilation if the structure is enclosed.
- Do not store hazardous materials in the shelter.
- Provide proper ingress and egress to prevent entrapment.

ANCHORING INSTRUCTIONS

Prior to assembling this shelter, please read the *MUST READ* document included with the shipment.

WARNING: The anchor assembly is an integral part of the shelter construction. Improper anchoring may cause shelter instability and failure of the structure. Failing to anchor the shelter properly *will void the manufacturer's warranty* and may cause serious injury and damage.

LOCATION

Choosing the proper location is an important step before you begin to assemble the structure.

The following suggestions and precautions will help you determine whether your selected location is the best location.

- Never erect the structure under power lines.
- Identify whether underground cables and pipes are present *before* preparing the site or anchoring the structure.
- Location should be away from structures that could cause snow to drift on or around the building.
- Do not position the shelter where large loads such as snow and ice, large tree branches, or other overhead obstacles could fall.

SITE

After choosing a location, proper preparation of the site is essential. The following site characteristics will help ensure the integrity of the structure.

- A level site is required. The site must be level to properly and safely erect and anchor the structure. If the site is not level, construct footings to provide a secure base to assemble the structure. Pre-cast concrete blocks, pressure-treated wood posts, or poured footings are all acceptable when properly used.
- Drainage: Water draining off the structure and from areas surrounding the site should drain away from the site to prevent damage to the site, the structure, and contents of the structure.

WARNING: The individuals assembling this structure are responsible for designing and furnishing all temporary bracing, shoring and support needed during the assembly process. For safety reasons, those who are not familiar with recognized construction methods and techniques must seek the help of a qualified contractor.

ASSEMBLY PROCEDURE

Following the instructions as presented will help ensure the proper assembly of your shelter. Failing to follow these steps may result in an improperly assembled and anchored shelter and will void all warranty and protection the owner is entitled.

The steps outlining the assembly process are as follows:

1. Verify that all parts are included in the shipment. Notify Customer Service for questions or concerns.
2. Read these instructions, the Must Read document, and all additional documentation included with the shipment ***before*** you begin assembling the shelter.
3. Gather the tools, bracing, ladders (and lifts), and assistance needed to assemble the shelter.
4. Check the weather ***before*** you install the roof cover and any panels (if equipped). Do not install covers or panels on a windy or stormy day.
5. Re-evaluate the location and site based on the information and precautions presented in the documentation included with the shipment.
6. Lay out the site (if this has not been completed).
7. Assemble the frame components in the order they are presented in these instructions.
8. Assemble the frame including the struts (if equipped).
9. Consult the Must Read document for anchoring comments and instructions.
10. Assemble and install the cable assemblies (if equipped). These are typically found on larger shelters. Your shelter may include struts or other methods of bracing attached during the frame assembly procedure. Some shelters do not require cables or struts.
11. Install, tighten, and secure the end panel (if equipped) and main cover. This applies to fabric covers that stretch over the frame assembly. *Your shelter may include roof panels or side panels or both.*
12. Read the Care and Maintenance information at the end of these instructions.

LIST OF WORDS AND PHRASES

Before you begin, it is important to become familiar with the words and phrases used in this instruction manual.

These words and phrases are common to most ClearSpan™ shelters and identify the different parts of the shelter. (Some are used in this document. Others may not apply to this particular shelter.)

These terms describe the shipped parts and can also be found on the materials list/spec sheets included with the shipment. To aid in the assembly, read through the following definitions before you begin to assemble your shelter.

- **Conduit:** An assembly of pipes used to secure the main cover and end panels (if equipped). Purlins and some strut assemblies also consist of connected pipes to form a conduit. Each pipe joint of a conduit assembly is secured with a self-tapping Tek screw.
- **Coupler or Fitting:** A part of the frame assembly where legs, purlins and rafter pipes are inserted and secured. In most instances, 3-way and 4-way couplers are used. In some larger applications, couplers are used to secure the joints of the different rafter sections during the assembly of the rafters. Some shelters do not use couplers.
- **Foot or Rafter Foot:** The part attached to and found at the base of the rafter or leg of the shelter. Depending on the shelter, the foot is an optional purchase. Some shelters do not offer an optional foot. Some use 1-way connectors.
- **Must Read Document:** This document includes building and shelter anchoring instructions, steps for end wall reinforcement, safety precautions, and notices and warnings. The Must Read document is sent with all shelters and buildings. If you did not receive a Must Read document, contact Customer Service to request one.
- **On-Center:** Term used to describe a measurement taken from the vertical center of the rafter or frame member to the vertical center of another.
- **Purlin:** The pipe assembly that runs perpendicular to the rafters or framework that supports the main cover. Purlins are found on the sides and roof areas of the assembled frame, are evenly spaced, and typically run from the front to the back of the shelter.
- **Plain or Straight Pipe:** A term used to describe a pipe that has the same diameter or width throughout its entire length.
- **Strut:** A strut is usually a length of pipe with two flattened ends and is used for diagonal bracing of the shelter frame. A strut is typically secured to the frame work by special brackets and bolts.
- **Swaged End or Swaged Pipe:** The term “swaged" refers to the tapered end of the pipe or tube. Swaged ends of a pipe can be inserted into couplers and the straight ends of other pipes.
- **Tek Screw:** A self-tapping fastener used to secure pipe joints and to fasten brackets to rafters.

REQUIRED TOOLS

The following list identifies the main tools needed to assemble the shelter. Additional tools and supports may be needed depending on the structure, location, and application.

- Tape measure or measuring device
- Chalk line (optional)
- Marker to mark locations on the pipes
- Variable speed drill and impact driver (cordless with extra batteries works best)
- Metal-cutting tool for pipe
- Wrench, ratchet and socket (recommended)
- Hammers and gloves
- Tin snips or similar cutting tool
- Ladders, work platforms, and other machinery for lifting designed to work safely at the height of the shelter

UNPACK AND IDENTIFY PARTS

The following steps will ensure that you have all the necessary parts before you begin to assemble the shelter.

1. Unpack the contents of the shipment and place where you can easily inventory the parts. Refer to the Bill of Materials/Spec Sheets.
2. Verify that all parts listed on the Bill of Materials/Spec Sheets are present. If anything is missing or you have questions, consult the Pictorial Parts Guide and all shelter diagrams for clarification, or contact Customer Service.

   NOTE: At this time, you do not need to open the plastic bags containing the fasteners (if used).

QUICK START GUIDE

For a quick overview of this shelter and its components, consult the Quick Start Guide at the back of these instructions.

Space below is reserved for customer notes.

The following graphics and photos will help you identify the different parts and show you how they are used. (Not all parts are shown.)

FA4482B
Tek Screw

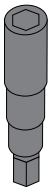

100441
Nut Setter

102921B
Neo-bonded
Galvanized Washer

QH1070
Pipe Strap

104075
1.75" x 1.75" Square
Tube Insert

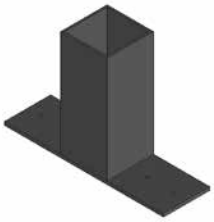

104624
1-Way Square Tube
Fitting w/ Plate

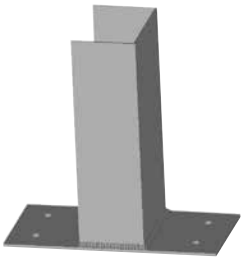

105088
1-Way Square
Tube Fitting

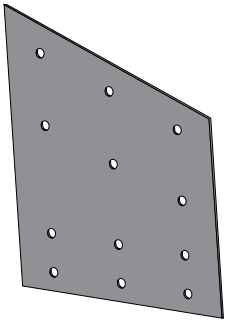

105087
Rafter Connection
Plate

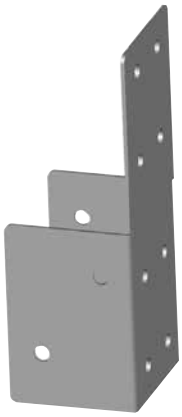

105086
Vertical Connection
Bracket

Carport 24' Wide with Polycarbonate Roof Panels

OVERVIEW

This section is an overview of the process for assembling your Carport. For details, please see section, Assembling the Carport Roof Frame Components. See illustration below to identify main parts of shelter.

1. Locate the required parts for each assembly procedure.
2. Assemble and position base rails.
3. Assemble rafter and frame.
4. Install struts.
5. Square and anchor carport.
6. Install hat channel and shelter bracing.
7. Attach roof panels.

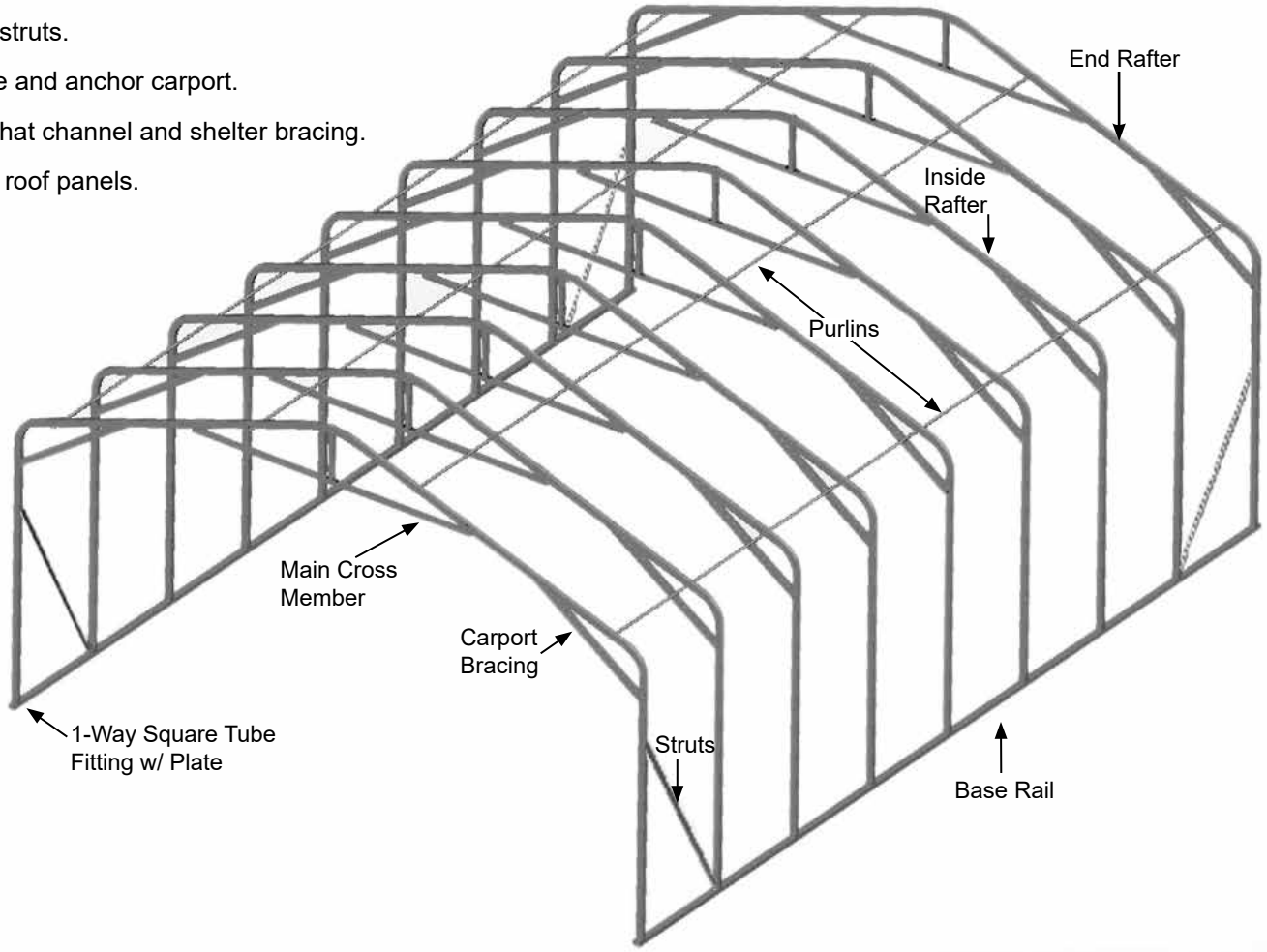

Diagram may show a different shelter length.

LAY OUT THE BUILDING SITE

After the site is prepared, marking the ground where the shelter will be situated and identifying the location of the shelter corners helps to square the frame after it is assembled.

Taking these steps ***before*** assembling the shelter saves time and ensures that the structure is positioned as desired. The following procedure is a suggested method. Its use depends on the size of the shelter, shelter application, the footings, and the method used to anchor the shelter.

SQUARE THE SITE

1. Identify a corner where a building rafter or base rail will be positioned, drive in a stake, and string a line the exact width of the building and stake in place.
2. Sting a line at least as long as the building from the first stake at 90°.

   NOTE: A transit can be used to ensure an accurate 90° angle, or the 3-4-5 rule can be used. Refer to diagram. Using multiples of 3-4-5 such as 6-8-10 or 12-16-20 helps to maintain an accurate 90° angle.
3. After squaring the position of the building and placing a stake at all corners, string a line between the stakes to mark the base of the building.

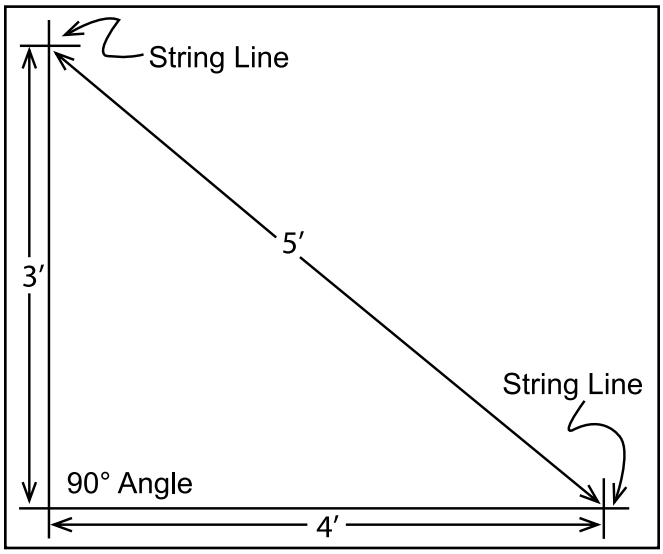

4. Continue with the BASE RAIL ASSEMBLY procedures that follow.

ASSEMBLE AND POSITION BASE RAILS

NOTE: Assistance may be required to assemble the carport frame.

Gather the parts:

- Square tubing (See chart below)
- 1-Way square connector (#105088)
- Tek screws and nut setter 3/8" x 2-9/16 magnetic

The base rails consist of 2" x 3" square tubing (plain and swaged) and run the length of the building.

Each shelter length has a different configuration of 2" x 3" square tubes for the base rails. The tubing requirements *for each base rail* for the different shelter lengths are listed below. (S = Swaged, P = Plain)

Shelter Length	Tubing Requirement (per base rail)
24'	2 @ 123"S & 54"P
28'	2 @ 123"S & 102"P
32'	3 @ 123"S & 30"P
36'	3 @ 123"S & 78"P
40'	3 @ 123"S & 126"P

ASSEMBLE BASE RAILS

1. Locate your shelter in the table above and determine the required tubing for each base rail.

   Example: For a shelter that is 32' long, one base rail would require three (3) 123" swaged tubes and one (1) 30" plain tube.
2. Insert the swaged end of each tube into the plain end of a tube until the entire base rail is assembled.

   NOTE: Use a hammer and wood block to lightly tap and seat the tubes together.
3. Repeat the procedure as needed for the remaining base rail.
4. Install one Tek screw at each splice on *each side* of the rail to secure the two tubes.

   DO NOT install the Tek screws on the top or bottom surface of the base rail.

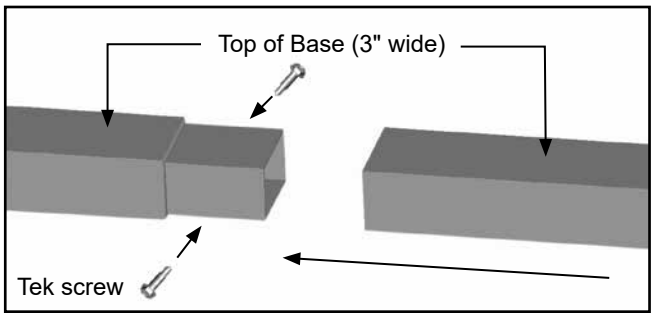

ASSEMBLE AND POSITION BASE RAILS (Continued)

ATTACH 105188 1-WAY CONNECTOR (RAFTER FEET)

Gather the Parts:

- Assembled base rails
- 1-Way connectors (#105088)
- Tek screws and nut setter 3/8" x 2-9/16 Magnetic
- Tape measure and marker

NOTE: Before attaching the 105088 connectors, verify that the heads of the Tek screws that secure the base rail tubes are not

1. Using Tek screws, attach the first 1-way connector (#105088) to the top of the base rail flush with the end of the base rail as shown.

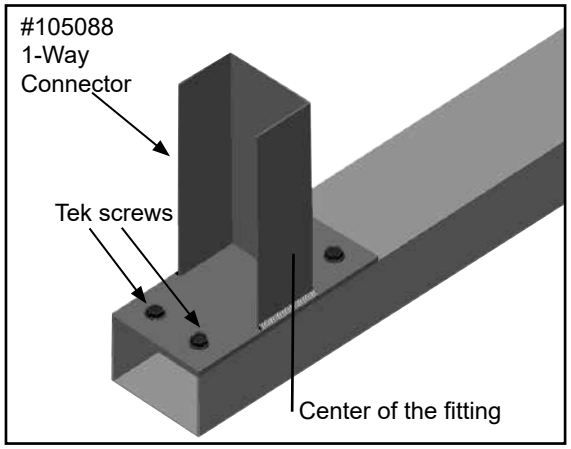

2. From the *center* of the installed 1-way connector (#105088), measure and mark 48" increments along the length of the base rail. These marks represent the 4' on-center rafter positions.
3. Center a 1-way connector (#105088) on each mark and secure the connector to the rail using Tek screws.
4. Repeat the steps for the remaining base rail.

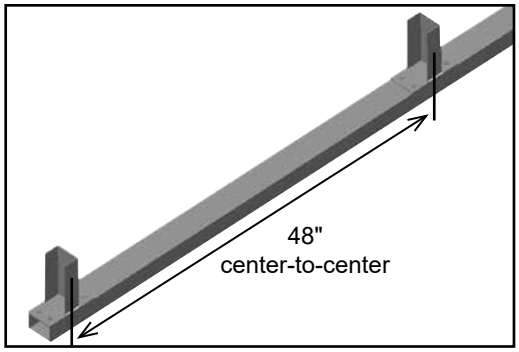

NOTE: Rafter spacing is measured center-to-center.

5. Position base rails on the site where the shelter will be assembled. Space rails at the approximate width of the shelter.

   ATTENTION: *Do not* anchor the rails to the site at this time. The assembled frame will be squared and anchored *after* the rafter and purlins are attached.

6. After the base rails are assembled, continue with the RAFTER ASSEMBLY.

RAFTER ASSEMBLY

Gather the Parts:

- Rafter pipes (#24CP23P3 & #24CP23P1)
- Rafter pipes (#R23S039 & #105330)
- Pipe strap (#QH1070)
- Square tube pipes (#S20P064 & #104075)
- Square fitting w/plate (#104624)
- Connection plate (#105087)
- Square vertical tube (#S20P020)
- Vertical connection bracket (#105086)
- Tek screws and nut setter 3/8" x 2-9/16 magnetic

Rafter Assembly Procedure

Each rafter assembly consists of seven (7) rafter tubes: one (1) curved center pipe (for the top or peak), two (2) bent leg pipes, and two (2) straight pipes between the peak and the bent leg pipes, and two (2) straight pipes.

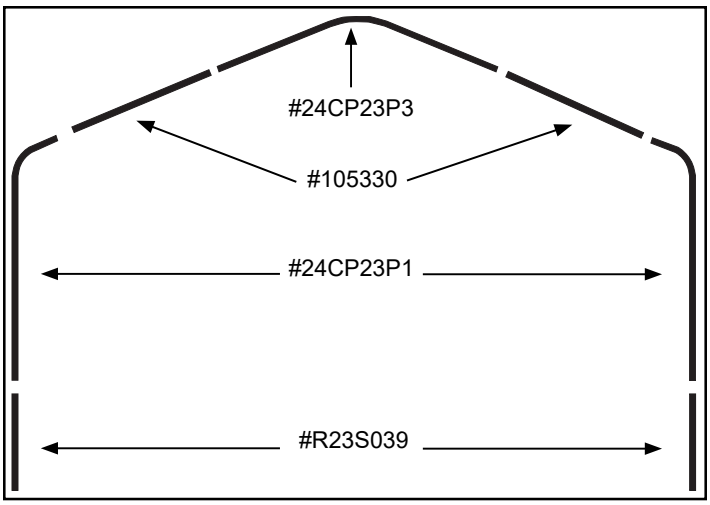

The following steps describe one way to assemble the rafters. Use the previous diagram for rafter tube placement.

IMPORTANT: To prevent damage to the roof panels, install the Tek screws so the heads do not touch the roof panels when these are installed.

1. Select the seven (7) tubes needed to assemble the rafter and place these on the ground as shown in the diagram above.
2. Insert the swaged end of the rafter tubes into the plain ends of the rafter tubes as needed to assemble the rafter.
3. Locate four (4) pipe straps (#QH1070) and attach each strap to the rafter assembly on the underside of the rafter at each tube joint as shown.

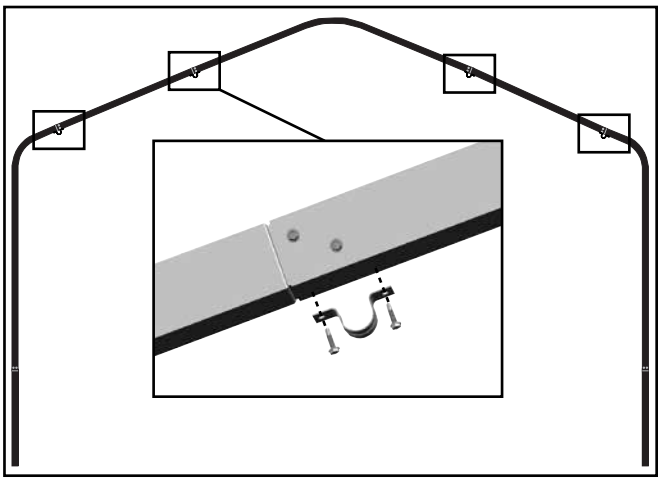

NOTE: The screws used to secure the pipe straps to the rafter are also used to secure the joint of the two rafter tubes. When installing the pipe straps, verify that you are installing the screws through one pipe and into the swaged end of the other pipe at the joint.

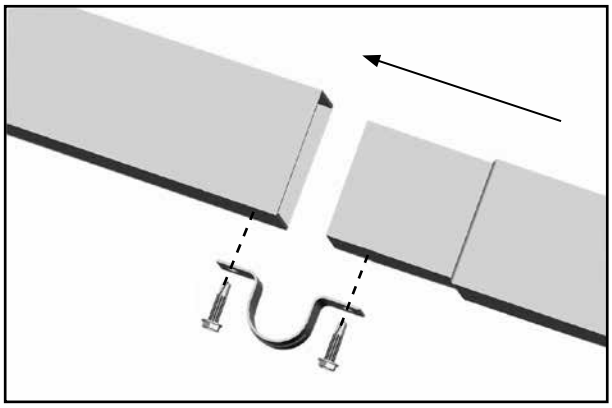

IMPORTANT: *DO NOT* tighten the pipe strap screws at this time. These are tightened after installing the purlins.

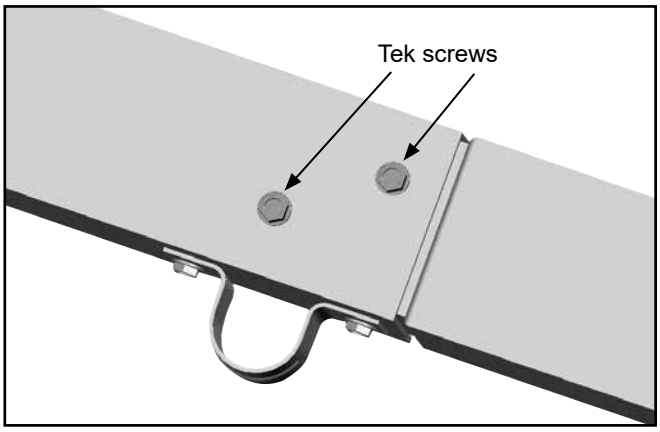

4. Install two additional Tek screws at each pipe joint in the location identified above.

RAFTER ASSEMBLY (continued)

5. Once the rafter tubes for the first rafter are assembled and the pipe straps (#QH1070) are attached to the *underside of the rafter tubes*, select the required tubing and brackets to assemble and attach the *center bracing*.

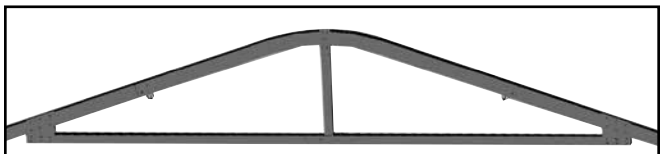

Center Rafter Bracing

The required parts for one (1) rafter are listed below:

- 2 (#S20P064): 2" X 2" plain square tubes at 64" each
- 1 (#104075): 1.75" X 1.75" plain square tubes at 16" each (insert)
- 1 (#S20P020): 2" X 2" plain square tubes at 20" each
- 1 (#104624): Square tube fitting with 1-way plate
- 4 (#105087): Connection plate (angled at top)
- 1 (#105086): Vertical bracket

ATTENTION: All parts are secured using Tek screws.

6. Locate the 20" vertical tube (#S20P020) and attach the vertical bracket (#105086) to one end of the vertical tube using eight (8) Tek screws.

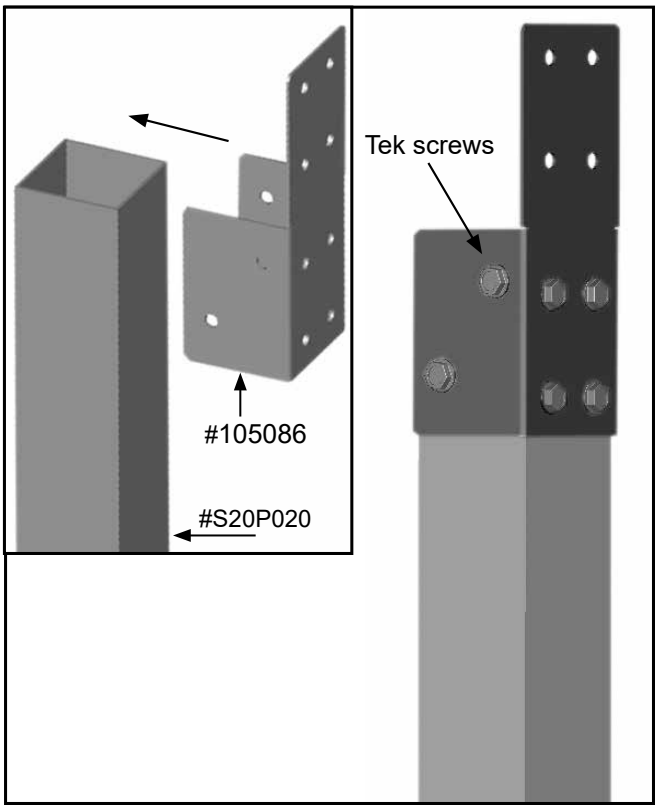

7. Select the two (2) 64" plain tubes (#S20P064) and connect them using the 16" plain tube insert (#104075) and Tek screws. This is the horizontal (or lower) portion of the center bracing for the rafter.

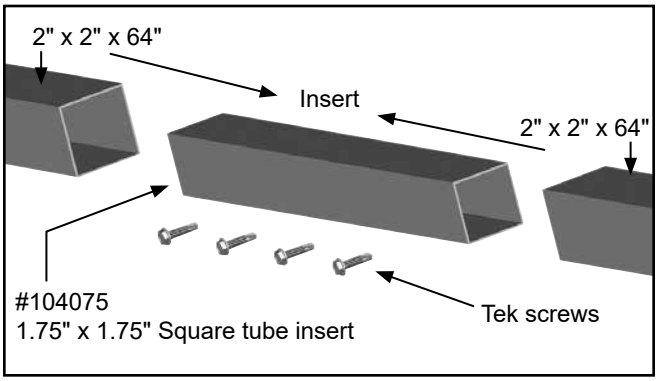

NOTE: After connecting the two (2) 64" square tubes as shown above, the center of the assembly will be at the pipe splice.

8. Center the square tube fitting (#104624) on the top of the assembly using the tubing splice as the center, and secure the fitting to the tubes.

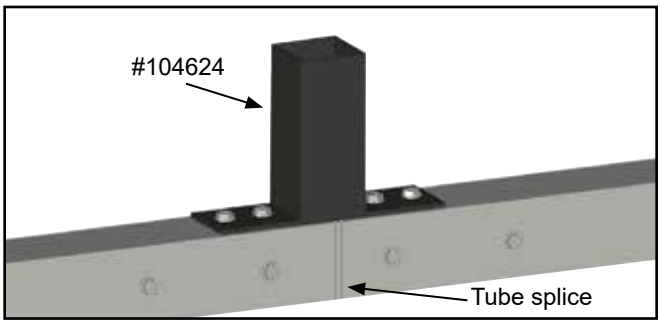

9. Place the 20" vertical tube (#S20P020) over the fitting installed in the previous step and secure with a Tek screw.

NOTE: Verify that the bracket attached to the top of the vertical tube is positioned so it can be secured to the face of the rafter.

If assembling an end rafter, the vertical bracket is attached to the back or inside of the rafter tube.

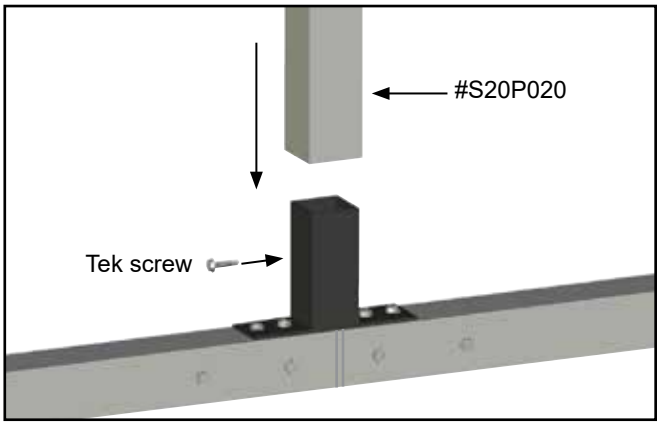

RAFTER ASSEMBLY (continued)

The below diagram shows the assembled center bracing for the rafter.

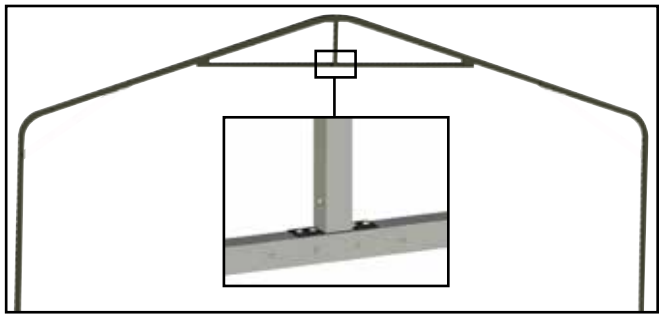

10. After attaching all center bracing components, position the brace assembly between the rafter legs and at the top of the rafter as positioned on the ground.

11. Align the vertical bracket with the center of the rafter (top) and secure the bracket with Tek screws.

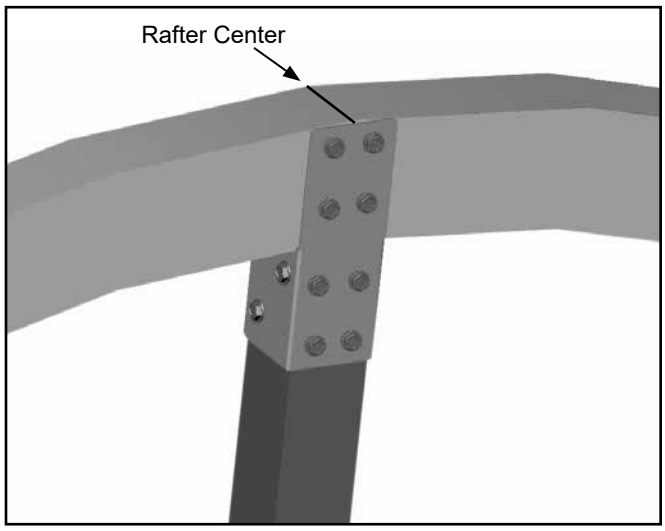

12. Locate the four (4) connection plates (#105087) and attach two (2) plates to the horizontal center brace tube and to the rafter.

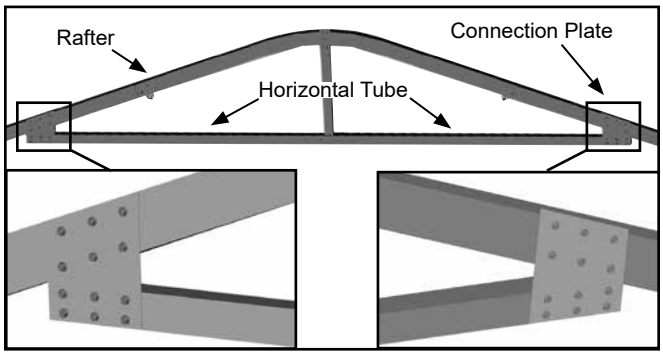

13. After attaching the first two connection plates, flip the rafter assembly over and attach the remaining two (2) connection plates for the rafter.

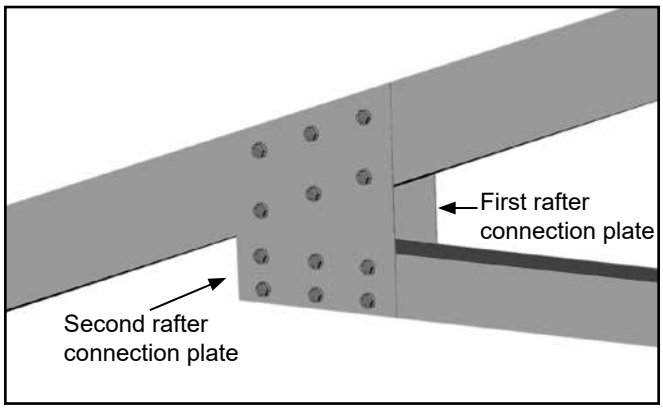

14. Repeat the procedures to assembly the remaining rafters and related center bracing.

15. After all rafter assemblies are complete, continue with the FRAME ASSEMBLY INSTRUCTIONS that follow.

FRAME ASSEMBLY

The following instructions assume the rafter feet (105088) are properly spaced on the base rails as previously instructed and that the site is level.

ATTENTION: If the site is not level as recommended, you must take the necessary steps to level the site. The frame will not assemble properly without a level side.

Tools needed:

- Permanent Marker
- Tape Measure

Gather the parts:

- Rafter assemblies
- Assembled base rails
- 1.315" x 75" swaged pipe (#131S075)
- 1.315" x XX" plain pipe (#131P0XX)
- Tek screws and nut setter 3/8" x 2-9/16 magnetic

NOTE: The purlins are part of the assembled frame. There are four (4) lengths of assembled purlins that run perpendicular to the rafter assemblies. Each purlin consists of 1.315" x 75" (#131S075) swaged pipes (number is determined by shelter length) and one (1) 1.315" x XX" (#131P0XX) plain pipe.

The X's represent the remaining length required to reach the end of the shelter. Consult the Spec Sheet for part identification if needed.

1. Select the required pipe sections for one purlin and connect these by inserting the swaged ends of the pipes into the plain ends until the entire purlin is assembled.

   NOTE: Assemble the purlins in a location that is accessible during the assembly of the frame, but will not interfere with the process of lifting and setting the rafters.

2. Verify that each pipe joint is properly seated.

   NOTE: These pipes must be taken apart during the assembly procedure. Do not fasten them together at this time.

3. For the 48" rafter spacing, measure forty-nine inches (49") from one end of the assembled purlin and mark the distance on the pipe.

   NOTE: This first measurement is one (1) inch longer than the on-center rafter spacing to account for the length of purlin pipe that extends through the pipe strap attached to the first end rafter.

4. From the location marked in the previous step, measure *forty-eight inches* (48") and make another mark.

5. Continue to mark the purlin in 48" intervals until all locations are marked. These marks help to maintain the 48" on-center rafter spacing of the shelter during assembly.

6. Repeat this procedure until all assembled purlins are marked.

7. After assembling all rafters and pre-marking the purlins, continue with assembling the frame.

ASSEMBLE THE FRAME

1. Carefully stand the *first end rafter* and place the leg pipes on the first set of rafter feet on the base rails.

2. Anchor the first rafter with ropes or other temporary bracing. *Verify that the rafter is plumb (straight).*

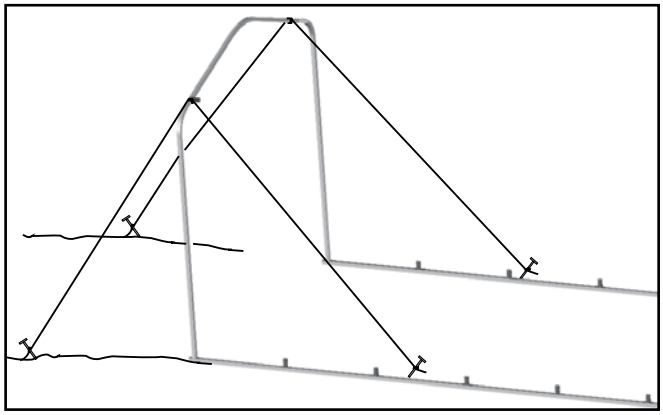

NOTE: In the above diagram, ropes (identified by black lines) are used to temporarily anchor the rafter in place. *Frame shown may differ from actual frame.*

For this first end rafter, all temporary bracing *must remain* in place until other rafters are set and attached to the first rafter and each other.

3. Secure the rafter leg tubes to each 105088 fitting using two Tek screws. Position the screws so they "drill" into the 105088 fittings that are secured to the base rail.

4. Carefully position the *first interior rafter* in place and secure the leg pipes to the rafter feet on the base rails as previously described.

5. As the second rafter is steadied, remove one section of pipe from one assembled purlin.

   NOTE: Work from the end that the measurements were made from when the purlin was initially pre-marked.

6. Insert the purlin pipe section through one of the pipe straps attached to the underside of the end rafter and through the pipe strap located in the *same position of the second rafter*.

FRAME ASSEMBLY (continued)

7. Rotate the purlin pipe so that the first mark is visible (*near the pipe strap of the second rafter*) and position the plain end of the purlin flush with (or slightly past) the outside edge of the pipe strap.

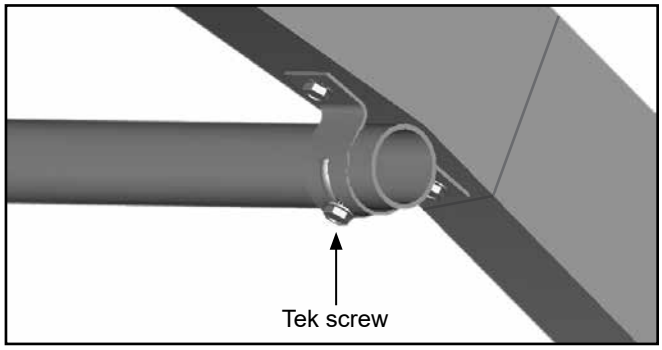

NOTE: Do not allow the purlin to extend beyond the end rafter.

8. Tighten the pipe strap mounting Tek screws and secure the purlin to the strap using another Tek screw as shown above.

9. Move to the second rafter and align the mark on the purlin with the *center of the rafter*.

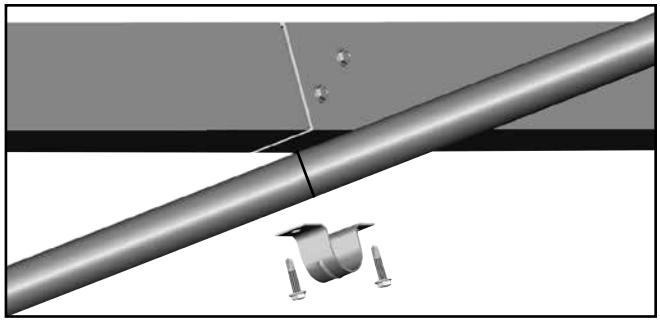

NOTE: Pipe Strap has been removed to show mark on the purlin.

10. Verify that the rafter spacing is forty-eight inches (48") on-center and tighten the pipe strap Tek screws.

    NOTE: *Do not* secure the purlin to the pipe strap at this time.

11. Repeat Steps 5-10 to install the first section of the remaining purlin assemblies for the first two rafters.

12. Choose another rafter assembly and set it in position.

13. Using Tek screws, secure the leg tubes of the third rafter to the 105088 connectors as previously described.

14. Remove another section of purlin pipe from the pre-marked purlin assemblies and attach to the rafter as previously described.

    NOTE: Do not mix the pre-marked purlin pipes. Each purlin assembly is pre-marked, disassembled, and reassembled on the frame as each rafter is set.

15. Verify that the distance between the rafters is 48" center-to-center at the top. Adjust the rafter forward or backward as needed to maintain this dimension.

16. Repeat the above steps as needed to stand, place, and secure the remaining rafters and purlins to complete the frame assembly.

    NOTE: If the last rafter is plumb and the purlin extends beyond the end of the rafter, cut the last section of purlin pipe to the required length if needed.

    DO NOT allow the purlin to extend beyond the end rafter. See earlier diagram (Step 7).

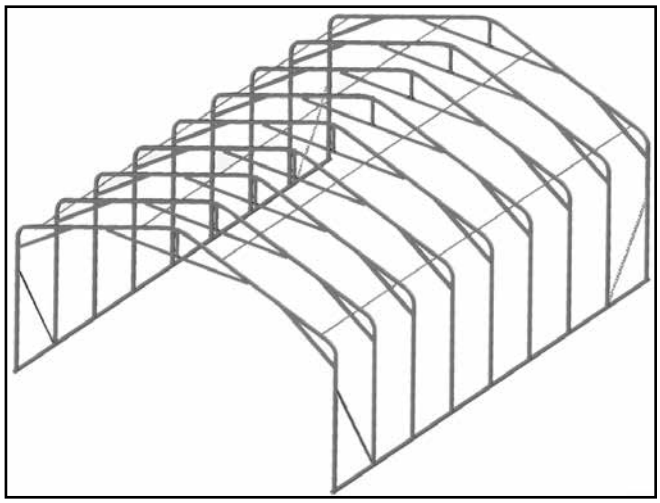

Frame shown may differ from actual frame. It is used for illustration only. Struts and side bracing are installed later in this manual.

17. Once all rafters are set and all purlins are in place and secured, return to each pipe strap and insert a Tek screw through the pipe strap and into the purlin. As shown in the diagram with Step 7.

18. After securing all purlin pipes to each pipe strap, locate all purlin pipe joints and secure each of these with a Tek screw.

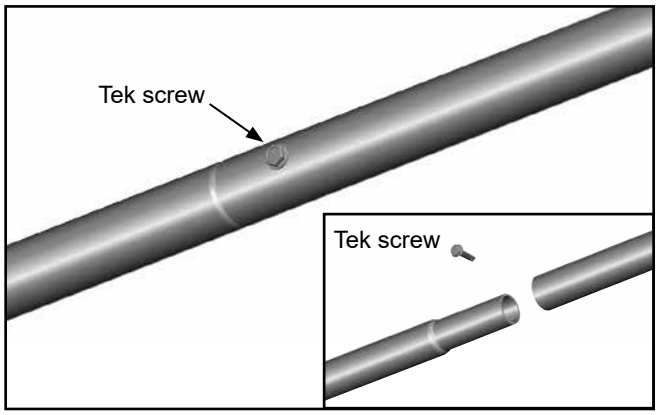

19. Remove the temporary bracing (if needed), and install the side struts.

SIDE STRUT INSTALLATION

Space below is reserved for customer notes.

Gather the parts:

- Struts (#QH1308)
- Tek screws

Complete these steps to install the four (4) side struts:

1. Locate one (1) seven foot strut and position it between one end rafter leg and the leg of the first interior rafter as shown below.

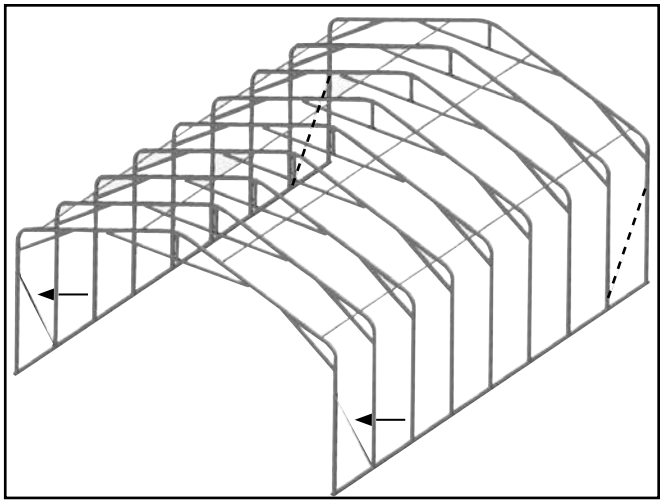

2. Align one end of the strut with the center of the interior rafter leg and *secure the strut to the base rail* with a Tek screw. See the diagram that follows for clarification.

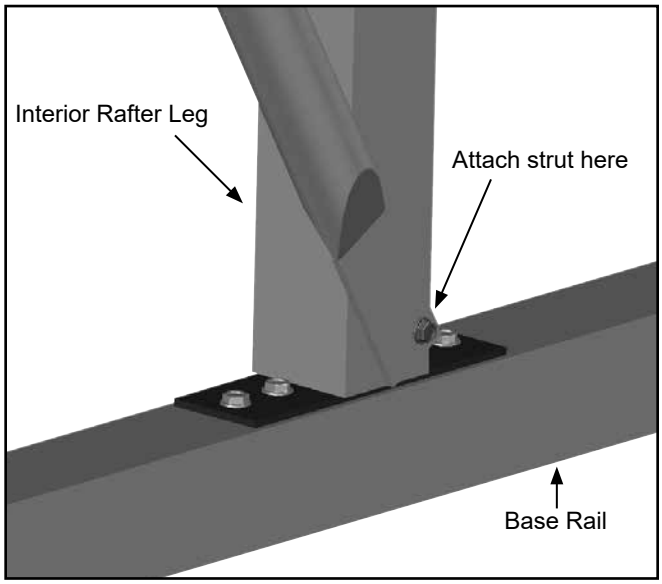

3. Verify that the end rafter is plumb (straight up and down) and *secure the top of the strut to the inside of the end rafter leg.*
4. Repeat the steps to attach the remaining side struts to the shelter frame.
5. After securing the four (4) struts, complete the next procedure to square the assembled frame.

SQUARE THE ASSEMBLED FRAME

Complete these steps:

1. Perform a final square of the frame by measuring diagonally (corner to corner) at the base and verify that the two measurements are equal.

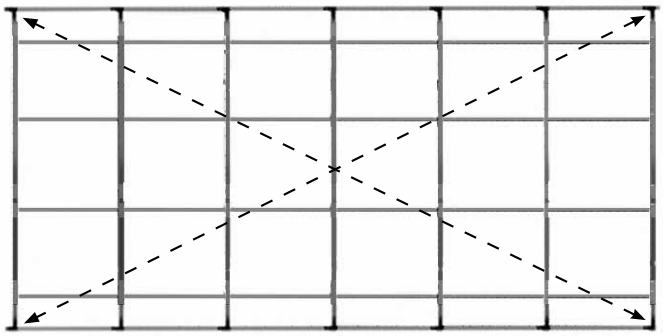

FRAME TOP VIEW

2. Examine the frame and remove any sharp edges from the frame or reposition screws so they do not come in contact with the roof panels.
3. Verity that all pipe and tube joints are secured with Tek screws. *This includes base rails, rafters, purlins, and all additional bracing.*
4. After the frame is squared, read or reread the **MUST READ** document and anchor the frame in place.

ANCHOR THE SHELTER

At this point in the assembly process, anchor the assembled frame. Once the frame assembly is anchored properly, continue with these instructions.

⚠ **WARNING**: Securing the base rails to concrete blocks or wood boards set on the site is not a substitute for properly anchoring the shelter. You must anchor the shelter as described in the MUST READ document.

FAILING TO PROPERLY ANCHOR THE SHELTER WILL RESULT IN DAMAGE TO THE SHELTER AND MAY CAUSE PERSONAL INJURY.

READ THE MUST READ DOCUMENT TO PROPERLY ANCHOR THE SHELTER.

The diagrams below illustrate two possible ways to properly anchor the shelter to the site.

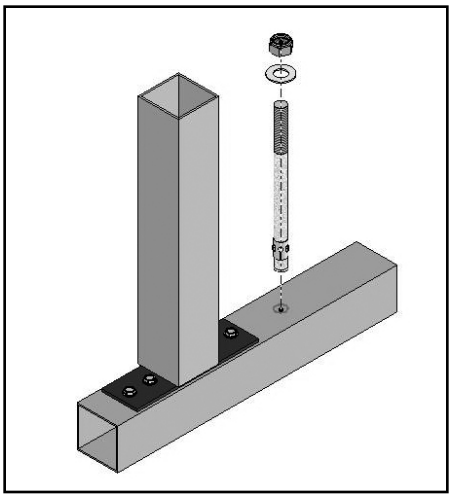

Anchor System for use on concrete

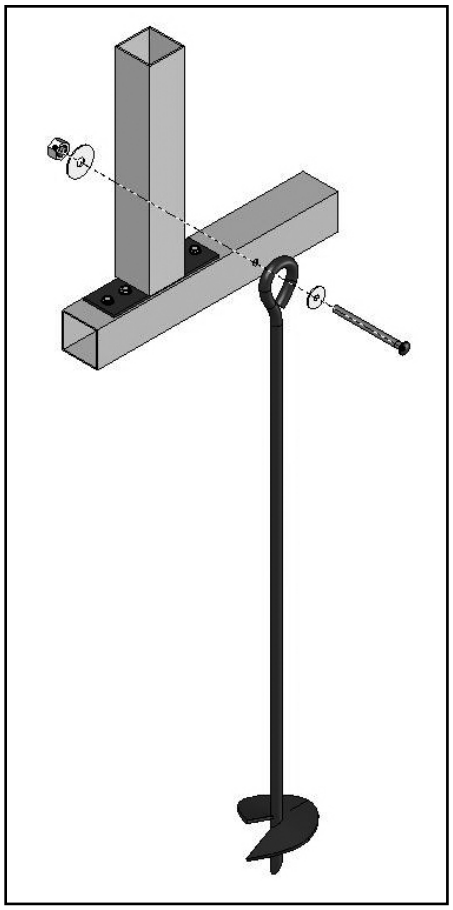

Ground Anchor System

The parts shown in the diagrams regarding anchor systems are *not included* with the shelter.

Contact Customer Service at 1-800-245-9881 to purchase additional parts to anchor the shelter.

INSTALL HAT CHANNEL

The roof panels are secured to the installed runs of hat channel using Tek screws and neo-bonded washers.

Tek screws and neo-bonded washers are used to secure the panels to the installed hat channel. Tek screws only are used to secure the hat channel to the roof rafters.

Required tools:

- Chalk line (optional)
- Tape measure
- Battery- (or electric-) powered driver
- Nut Setter 3/8" x 2-9/16 Magnetic

Gather the Parts:

- Hat channels (#105352)
- Tek screws

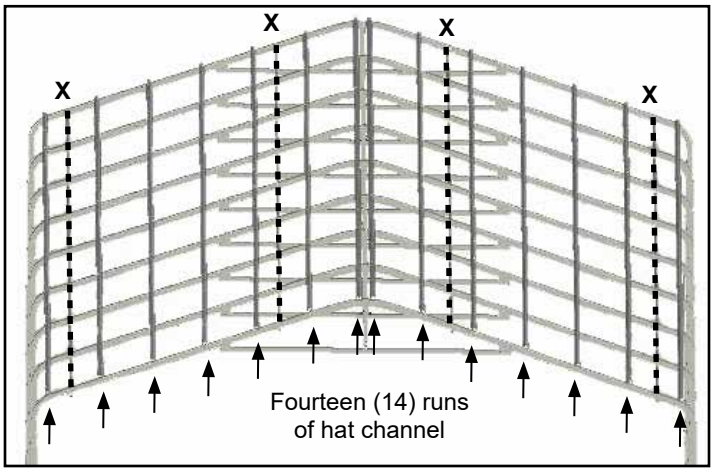

Hat Channel Location Diagram (See arrows for locations). Dashed lines and X's identify purlin locations.

The following steps describe one way to install the hat channel and roof panels.

1. At the peak of the end rafter, locate and mark the center.
2. Move to the other end rafter and repeat Step 1.
3. Measure 4-1/2" from the center mark *on both sides of the center* and mark the locations.

   NOTE: These marks identify the on-center locations of the upper two (2) hat channel runs. Consult the diagram at the top of the following page.
4. Repeat the step for the other end rafter.
5. Take a chalk line and using the marks made in Steps 3 and 4, snap a line across the tops of the rafters.
6. Using the on-center marks and the chalk line (if used), position the first length of hat channel on the assembled frame and secure it in place using Tek screws only.

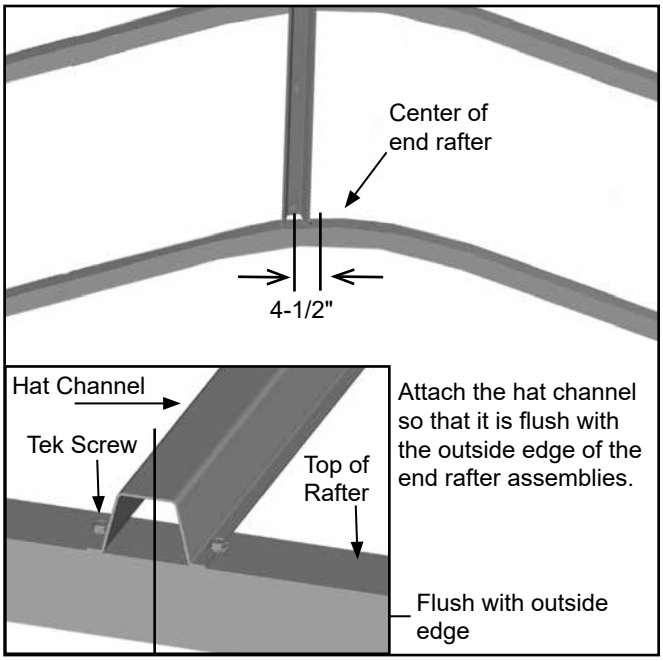

ATTENTION: If the length of the frame requires additional sections of hat channel for each run, cut the hat channel to length (see notes below) allowing 1"– 2" to overlap the previous section of hat channel, and secure to the rafter.

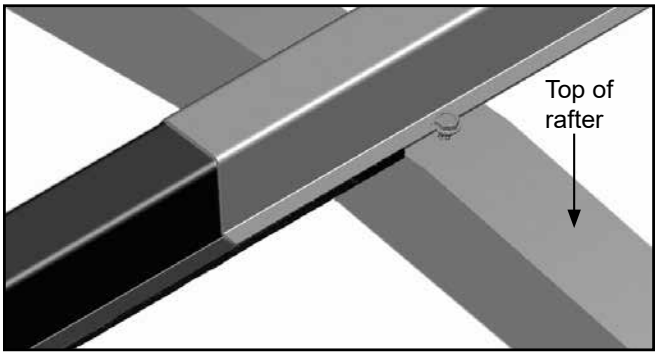

Hat channels are shipped in 12' 3" sections, overlap each section to complete a single run of hat channel.

For 24', 32' and 36' carport lengths: DO NOT cut the individual sections to length. The sections are overlapped when installed.

For 28' and 40' carport lengths: Cut seven (7) of the 12' 3" sections in half and overlap the hat channel to complete the individual runs.

INSTALL HAT CHANNEL (continued)

7. After installing the first run of hat channel on one side of the peak, repeat the steps to install the first run at the peak for the other side of the frame.

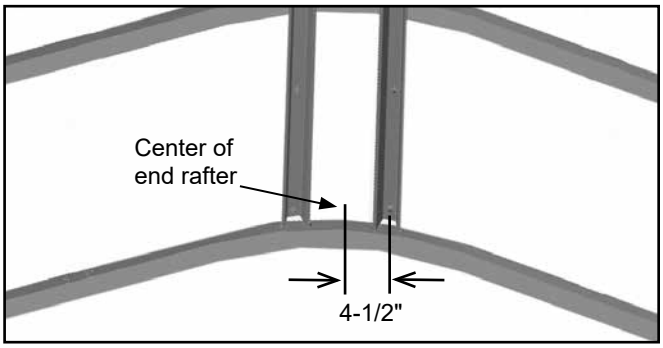

8. With both runs of upper hat channel installed near the peak of the frame, measure 70-1/2" from the *center of the upper hat channel down the rafter* and mark the location.

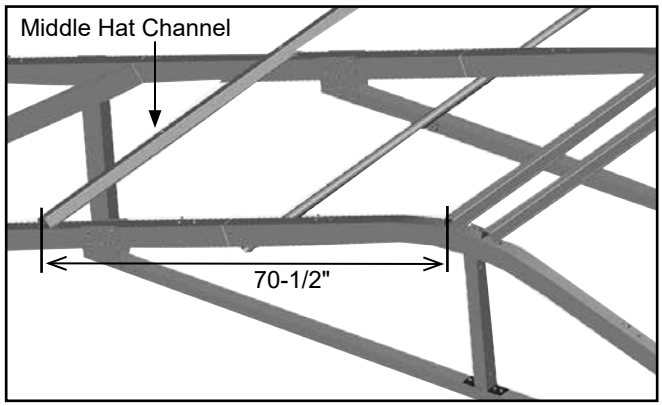

ATTENTION: The dimension marks the on-center location of the middle hat channel run for one side of the roof frame.

9. Move to the other *end of the frame* and mark the same location on that end rafter.

10. Attach the hat channel to the rafters as previously described.

NOTE: Verify that the hat channel sections are parallel with the installed purlins and to one another.

11. With the middle run of hat channel installed, move down the rafter and install the lower run of hat channel.

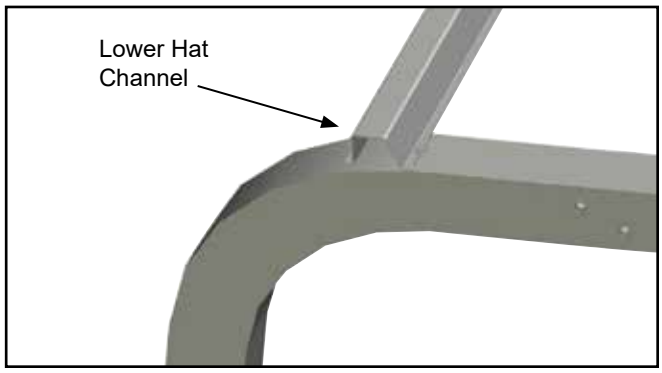

ATTENTION: For proper installation of the roof panels, the hat channel (previous photo) must be positioned *near the curve of the rafter leg* but not on the curve.

Roof panels must lie flat across the top of the hat channel when installed.

12. Using the hat channel location diagram (presented earlier) and the diagram below, identify the number of hat channel runs that remain and evenly space them between the installed runs of hat channel.

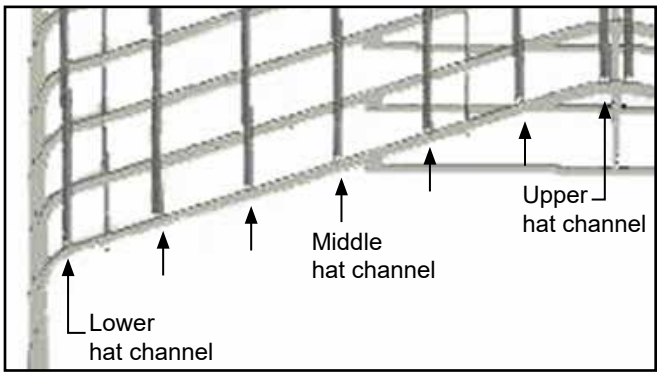

ATTENTION: Evenly space the remaining hat channel runs between the upper, middle, and lower sections that were installed.

13. Once all of the hat channel runs are installed on the first half of the frame assembly, repeat the steps to install the hat channel on the remaining half of the frame.

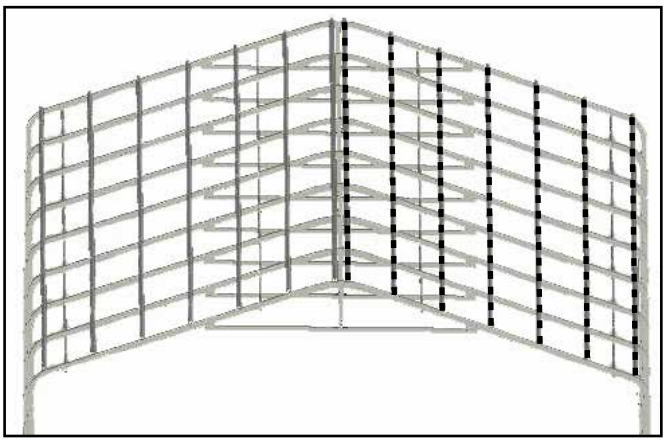

Dashed lines identify the hat channel runs for the remaining half of the roof frame. Length of shelter may differ from the shelter that is shown above

ATTENTION: All runs must be evenly spaced and parallel to each other.

14. After all hat channel runs are installed, continue with the installation of the shelter bracing for each rafter.

INSTALL SHELTER BRACING

The diagonal shelter bracing is installed *after* the frame is squared and anchored and *before* installing the roof panels.

Gather the parts:

- Bracing (#105090)
- Tek screws

Complete these steps to install the diagonal bracing for the shelter.

1. Locate one (1) five-foot (5') brace and place it into position as shown below.

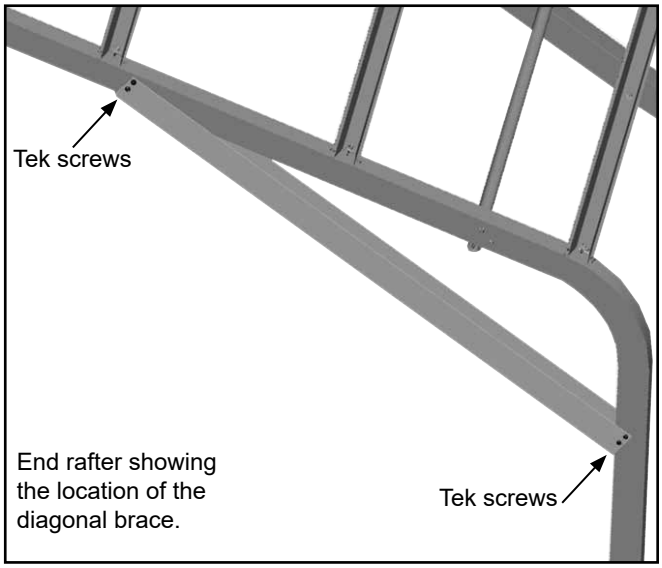

   NOTE: Before attaching the brace to the rafter leg, verify that the rafter is plumb (side-to-side and front-to-back).

2. Secure the brace to the rafter using Tek screws as shown above.
3. Repeat the procedure for the remaining diagonal rafter braces.

   NOTE: To keep all diagonal bracing consistent throughout the frame, measure the location of the first brace and duplicate that measurement for the remaining braces.

4. After all diagonal bracing is installed and secured to the assembled frame, install the roof panels.

INSTALL ROOF PANELS

The following steps describe one way to install the roof.

Gather the Parts:

- Corrugated roof panels - 12' ft. (#104621G)
- Corrugated roof panels - 8' ft. (#104620G)
- Corrugated ridge caps (#105520)
- Tek screws and neo-bonded washers

ATTENTION: Use Tek screws and neo-bonded washers to attach the roof panels. *Install all roof panels with the UV-protected side toward the sun. Install the Tek screws in the valleys of the panels.*

The position of the panels depends on where the upper hat channel runs were installed. *Before you secure the panels to the hat channel,* use a section of ridge cap to verify that the upper gap between the panels can be covered with the ridge cap. Adjust panel positions as needed.

1. Locate all 12' polycarbonate panels (#104621G) and cut each of these panels in half. These panels are used for the top row on both sides of the roof. Tin snips or other similar cutters can be used to cut panels.

   ATTENTION: *Do not* cut the 8' polycarbonate panels (#104620G). These are used for the bottom row.

2. After cutting all 12' panels in half, place these in an accessible location and continue with the next step.
3. Position the first 8' corrugated panel (#104620G) on the roof as shown *with the UV-protected surface exposed to the sun*. (Panels are marked.)

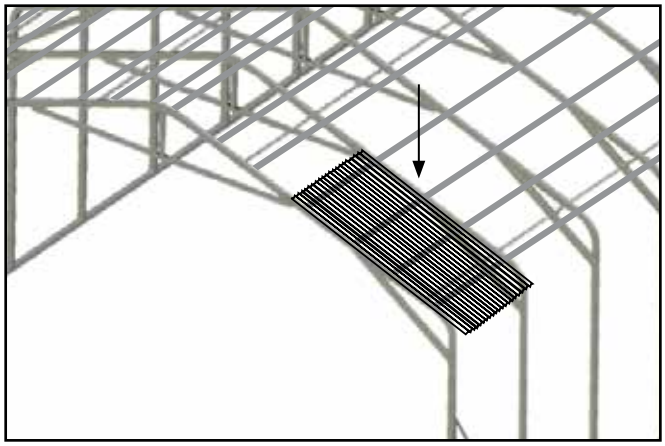

INSTALL ROOF PANELS (continued)

NOTE: At this point, verify that the upper edge of this first panel is in line with or above the middle hat channel. Tek screws are installed through the panel and into the hat channel.

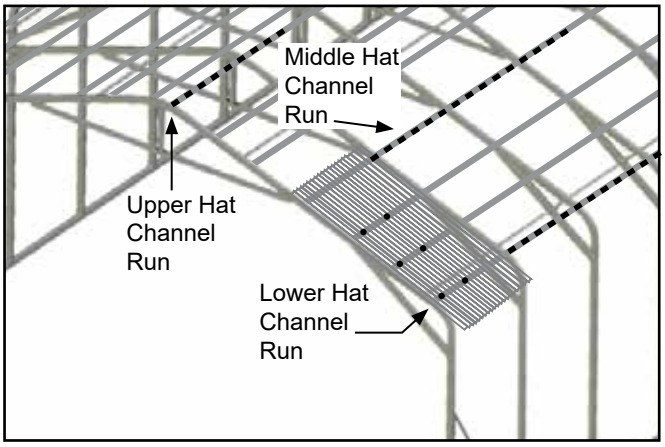

The outside edge of this panel is positioned flush with the edge of the end rafter and hat channel.

At this time, install Tek screws and neo-bonded washers in the areas identified by the white dots in the diagram above. *Verify that the UV-protected surface is facing the sun.*

You can also determine how much of the lower end of this first panel you want to extend beyond the lower hat channel section. *The placement of this first panel will serve as a guide when you install the remaining panels.*

4. Take one of the 6' sections (cut in Step 1) and place it in position as shown. *Verify that the UV-protected surface is facing up.*

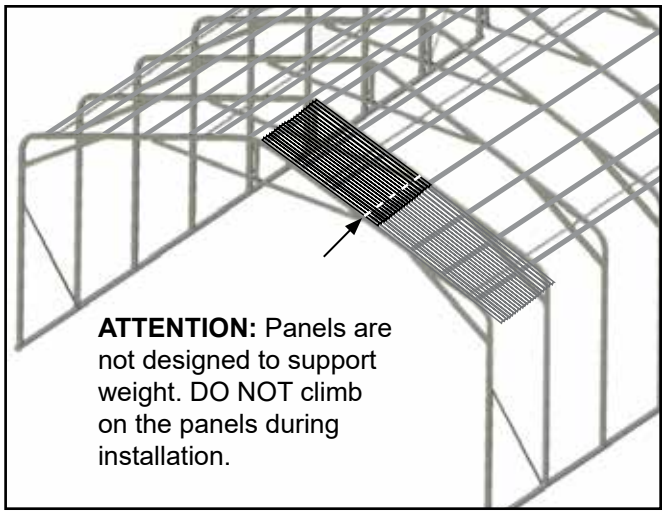

Upper panel overlaps the lower panel. White dashed line indicates top edge of lower panel.

5. Align the top edge of the panel with the upper hat channel so that the panel runs parallel with the hat channel and the edge of the end rafter.

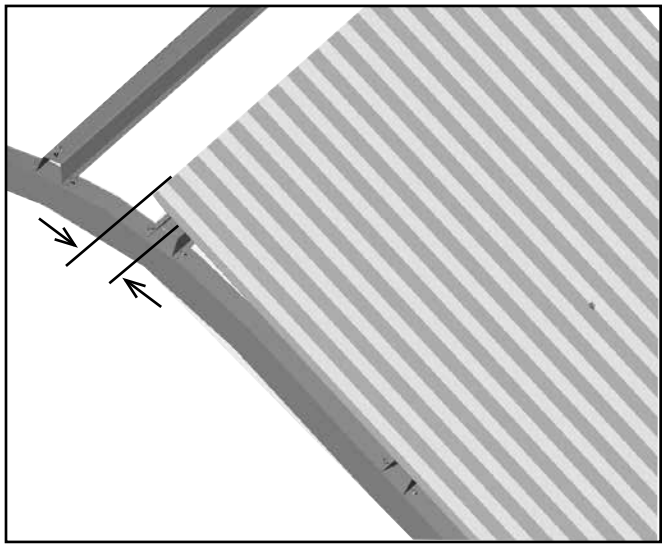

Allow the panel to slightly extend beyond the center of the upper hat channel as shown above.

This 6' panel and all remaining 6' panels will overlap the installed lower 8' panel.

6. Secure this upper panel to the hat channel using Tek screws and neo-bonded washers. Verify that the gap will not be too great at the top of the shelter between the upper panels. Use a section of the ridge cap as a guide before securing the upper panels to the frame.

Use three (3) fasteners for each run of hat channel *per panel.* The third fasteners (not shown) for the panels in the following diagram are installed when the next panels are set on the frame.

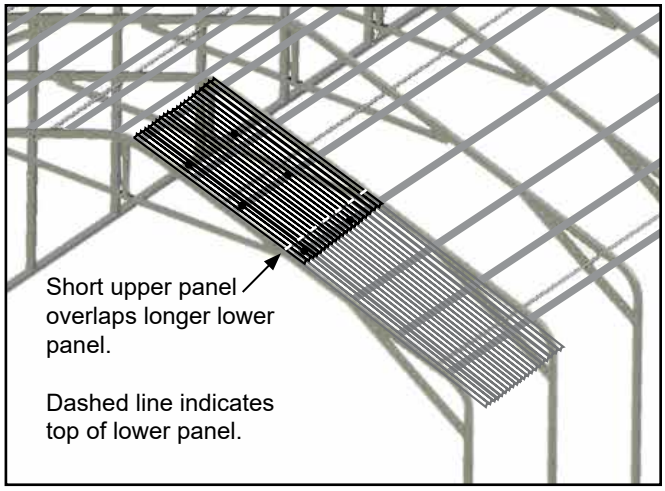

ATTENTION: *Do not install screws along the top edge of the panel and the edge that will be overlapped by the next panel.*

INSTALL ROOF PANELS (continued)

SEE THE DOTS IN THE PREVIOUS DIAGRAM FOR THE LOCATION OF THE FASTENERS FOR THE FIRST PANEL.

The top edge will be secured to the hat channel when the corrugated ridge cap is installed; the edge overlapped by the next panel is secured when that panel is installed.

7. Repeat the steps to install and secure the next panel, which is the first, lower panel of the other side as shown below.

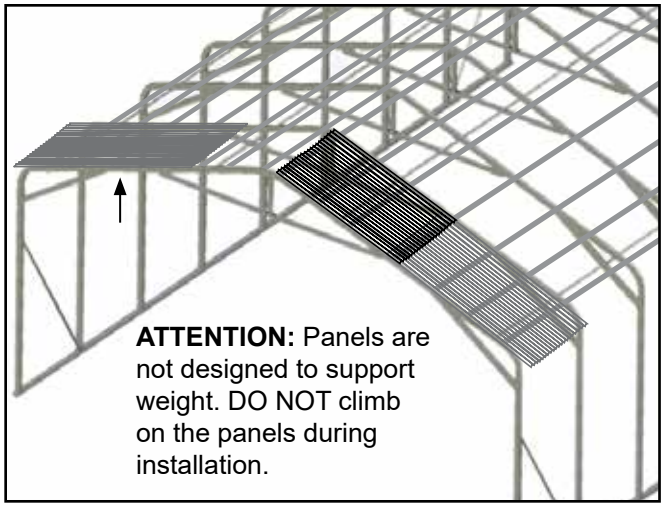

8. Add the 6' upper panel (below) and secure the panel to the hat channel. Use a section of ridge cap to verify that the space between the upper panels is not too wide.

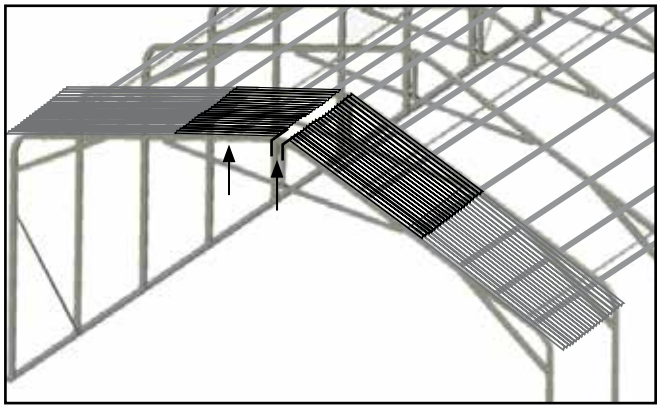

NOTE: A space will remain at the peak of the frame between the panels. The ridge cap covers this when it is installed.

9. After installing the first set of roof panels, attach the first section of corrugated ridge cap.

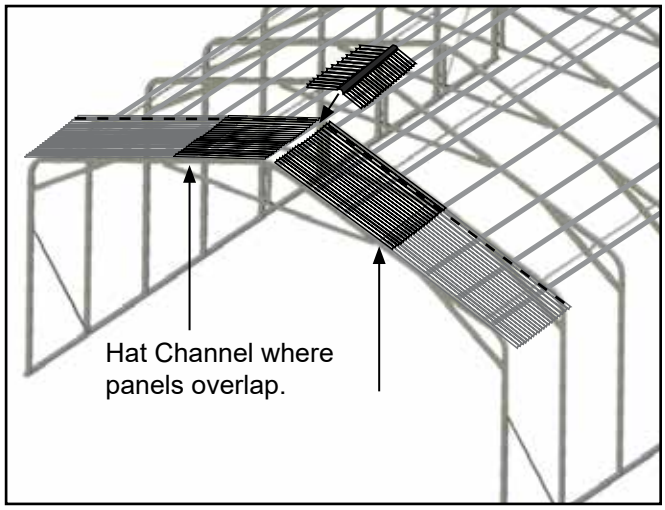

ATTENTION: *At this time, no fasteners are installed in the areas identified by the dashed lines. If Tek screws are present along this edge, these must be removed to properly install the next set of panels, which will overlap the first set of installed panels.*

10. Continue the panel installation by attaching the next lower 8' panel.

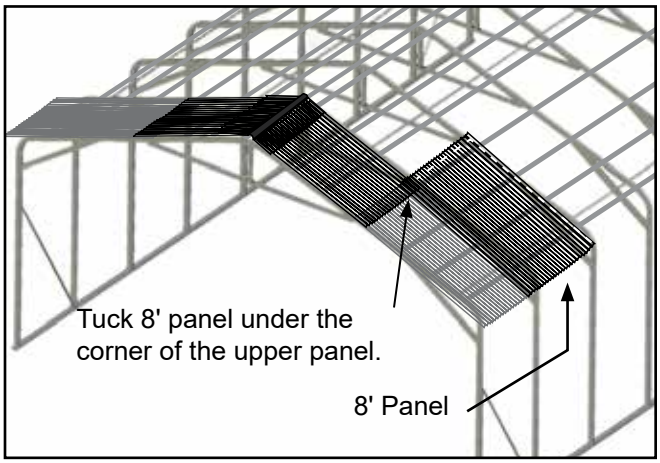

ATTENTION: This second lower panel overlaps the first lower panel along the side and is tucked under the corner of the first upper panel. See the arrows in the above diagram.

INSTALL ROOF PANELS (continued)

11. Install the next upper panel.

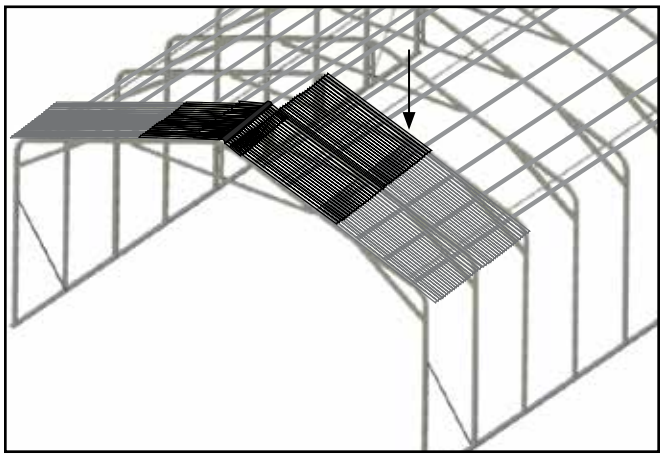

ATTENTION: Verify that the upper panel overlaps the top of the lower panel. In addition, the top of this 6' panel must be tucked under the edge of the ridge cap that was installed in Step 9.

12. Repeat the steps to install the second set of panels for the side of the roof shown below.

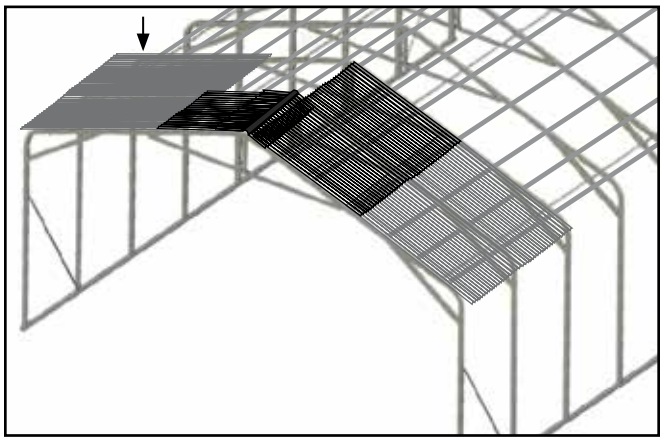

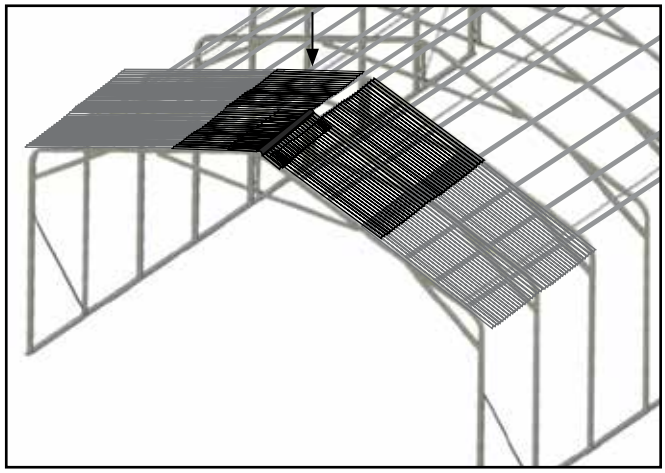

Verify that the upper panel is tucked under the installed section of ridge cap before installing the next section of ridge cap.

13. Install the next section of ridge cap.

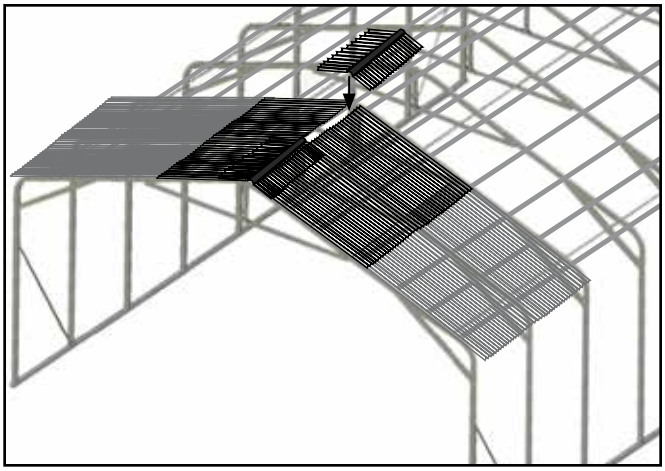

14. Repeat the pattern and continue to install the remaining roof panels and ridge caps until all panels are in place.

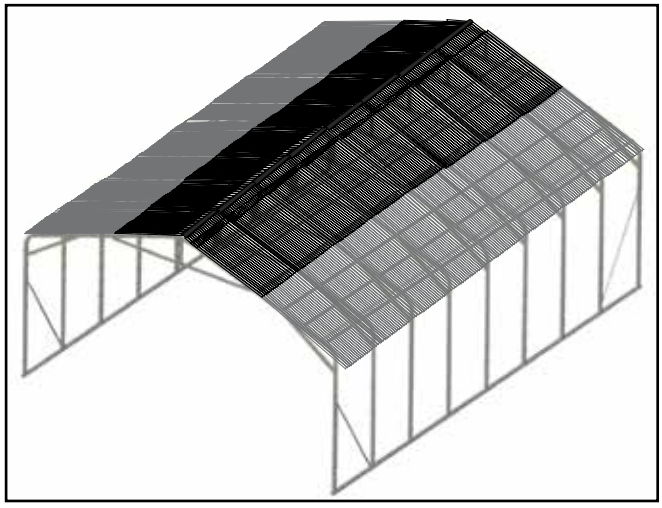

Frame above may differ in length from actual frame.

15. Read the care and maintenance information that follows.

CARE AND MAINTENANCE

Proper care and maintenance of your carport is important. Check the following items periodically to properly maintain your carport:

- Regularly check the roof panels to see that they remain tight and in proper repair.
- Check connections and all fasteners to verify that they remain tight.
- Verify that the anchor system used to secure the assembled frame to the site is in good repair and that all connections and fasteners are tight.
- Do not climb or stand on the shelter at anytime.
- Remove debris and objects that can accumulate on the shelter. Use tools that will not damage the roof panels when removing debris.
- Remove snow to prevent excess accumulation. Use tools that will not damage the roof panels when removing snow.
- Check the contents of the shelter to verify that nothing is touching the roof panels that could cause damage.
- If the shelter is moved, inspect all parts and connections before using.
- For replacement or missing parts, call 1-800-245-9881 for assistance.

NOTE: With the exception of Truss Arch buildings, ClearSpan™ shelters and greenhouses *do not* have any tested loading criteria.

Space below is reserved for customer notes.

ClearSpan

QUICK START GUIDE

24' Wide Carport with Polycarbonate Roof Panels

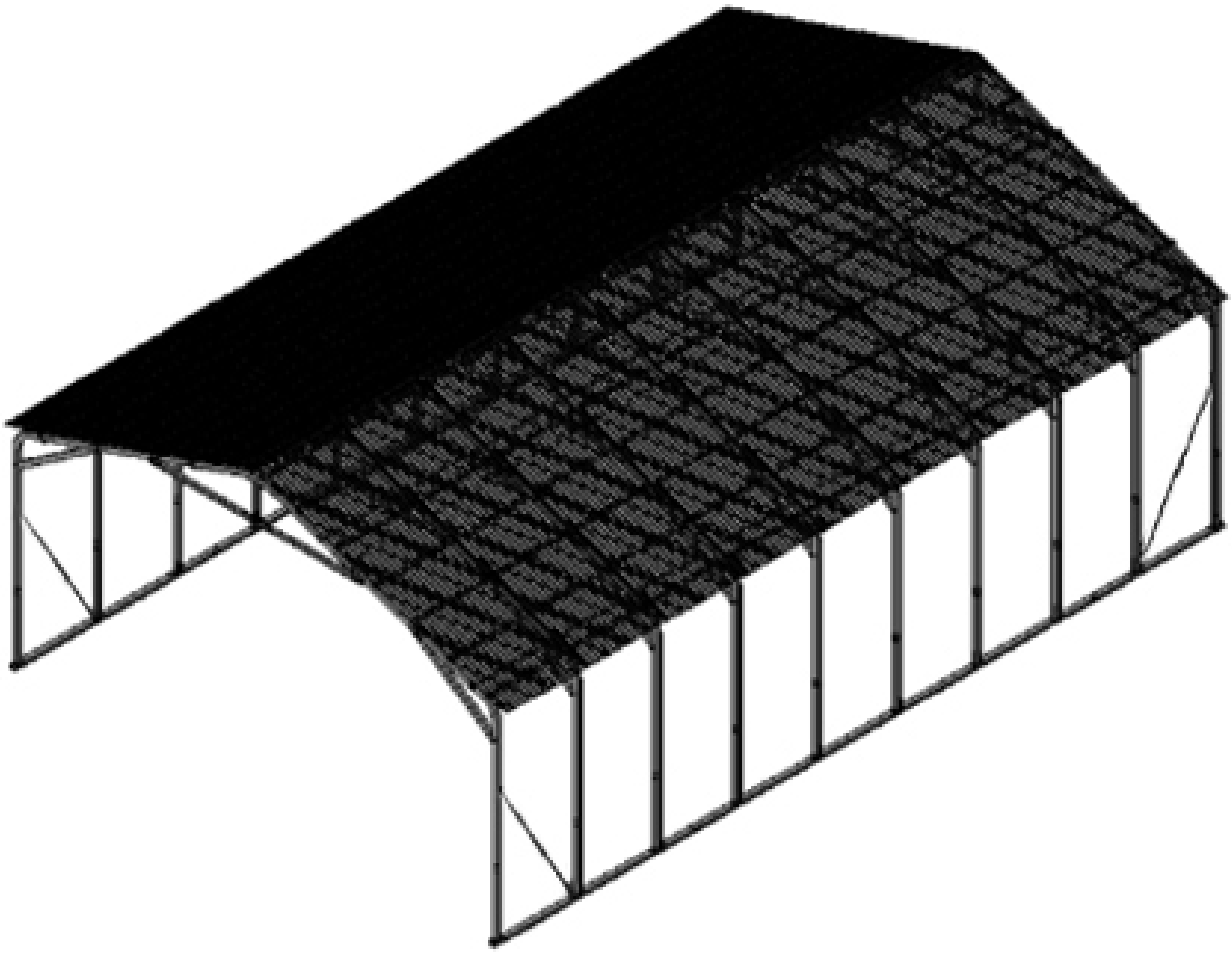

Frame shown may differ in length from actual frame.

FRONT PROFILE

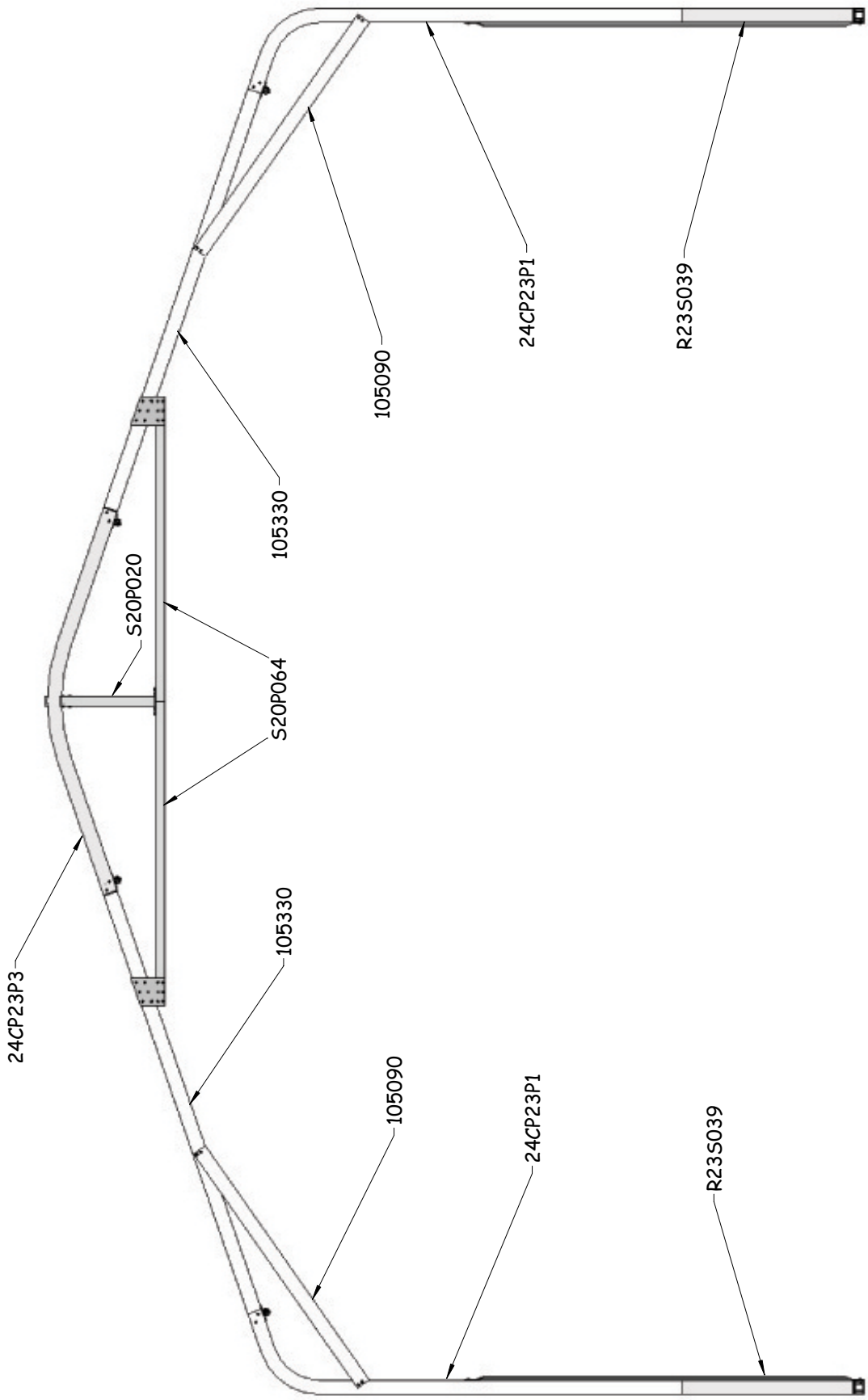

SIDE PROFILE - 105514

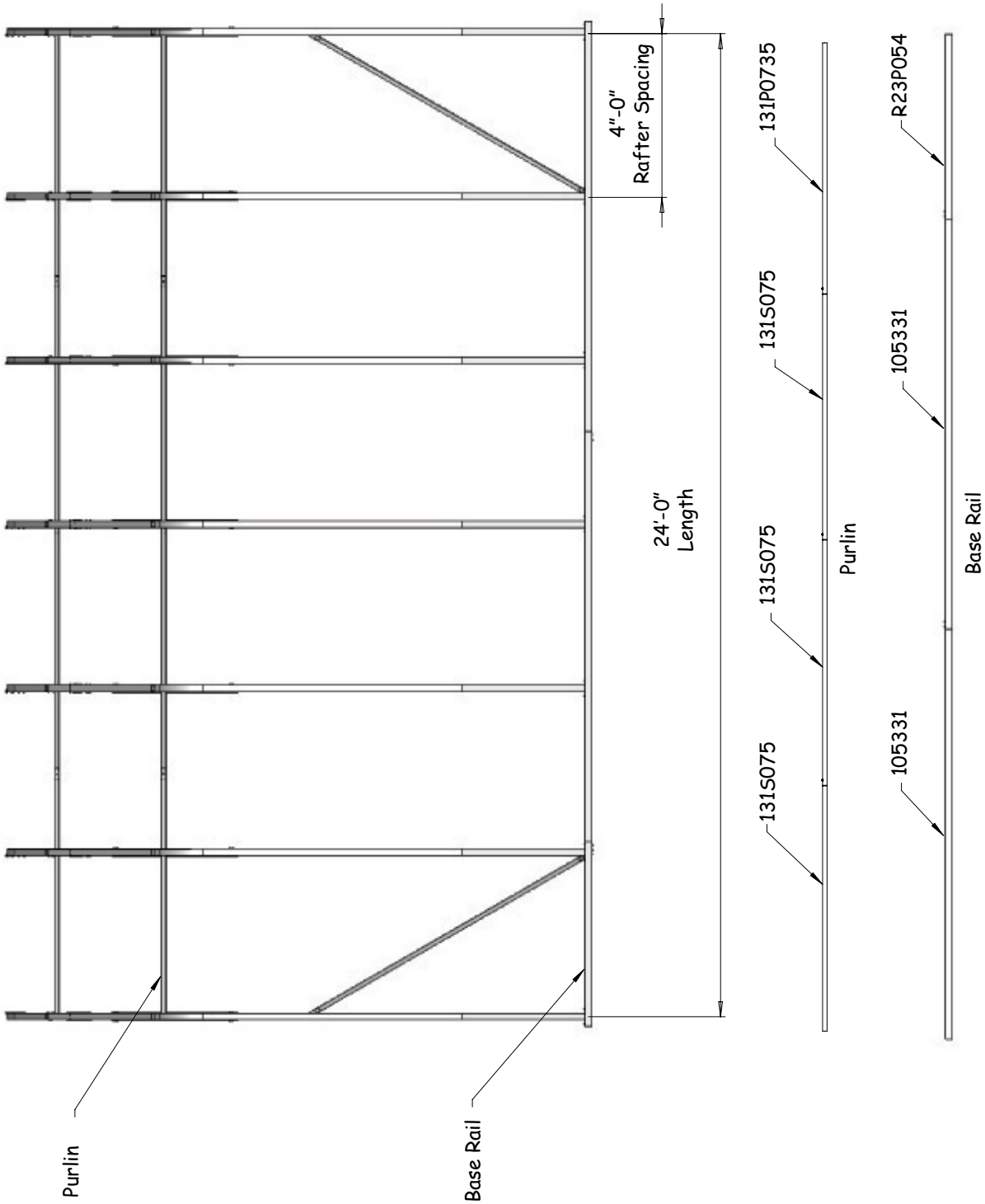

SIDE PROFILE - 105515

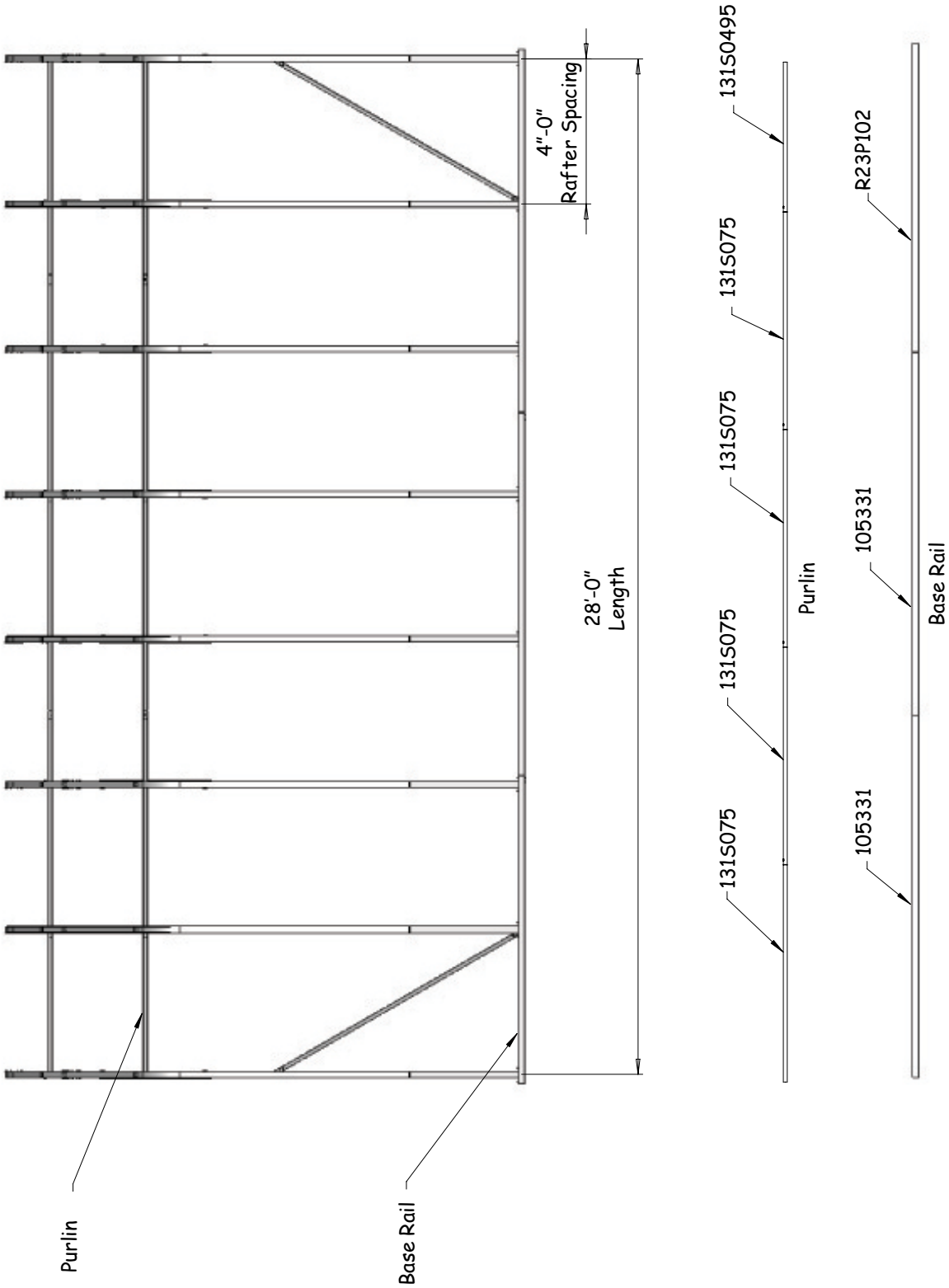

SIDE PROFILE - 105516

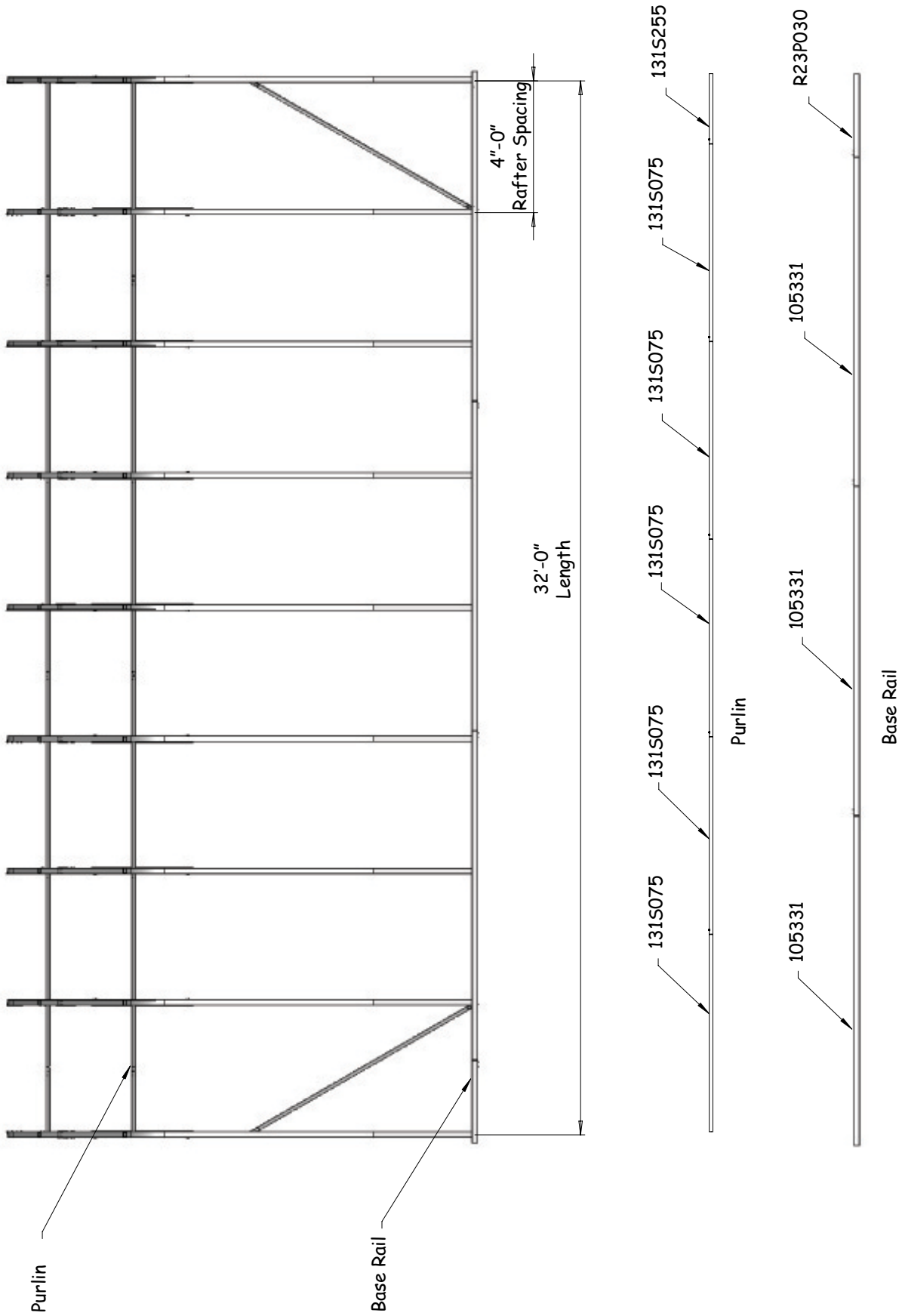

SIDE PROFILE - 105517

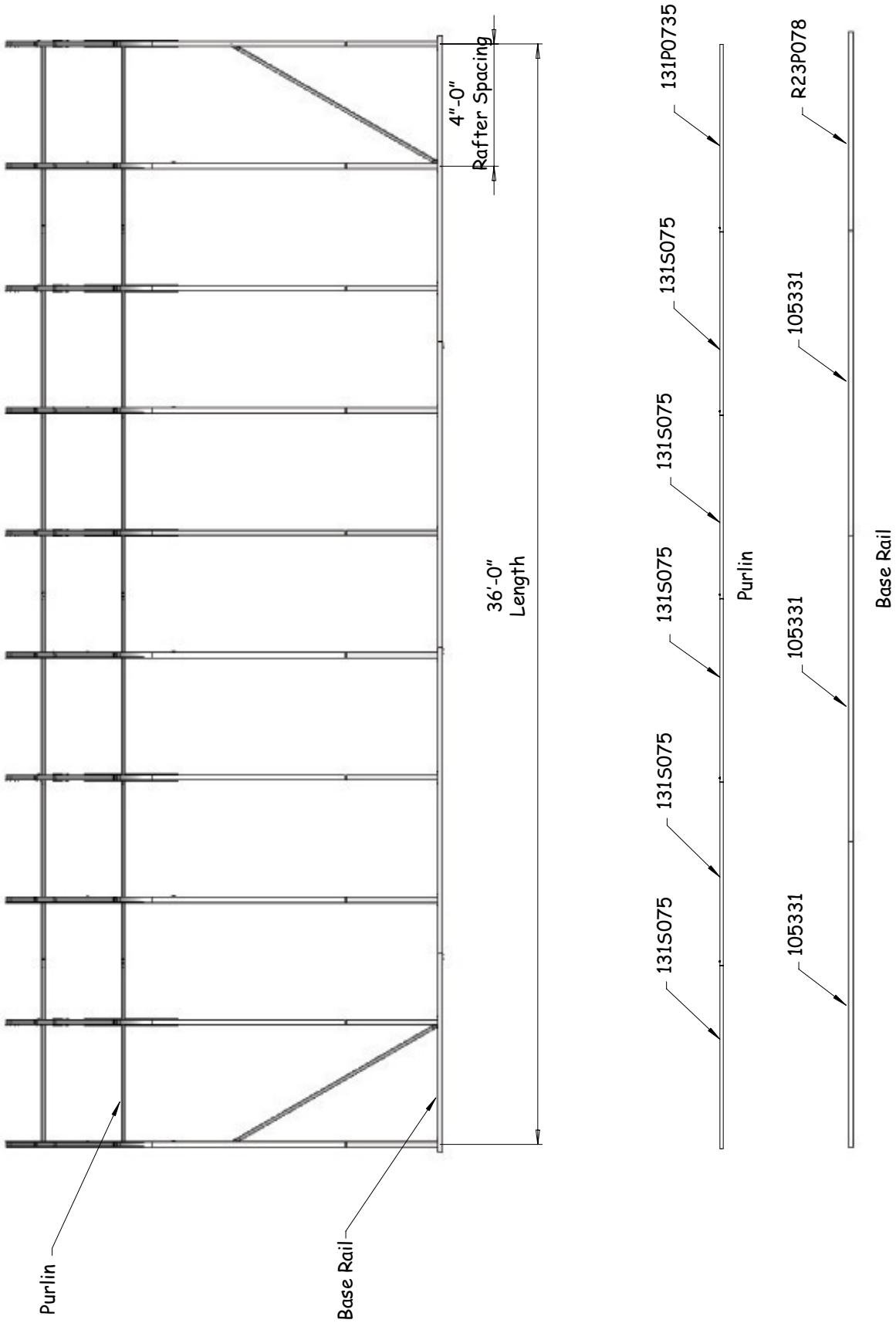

SIDE PROFILE - 105518

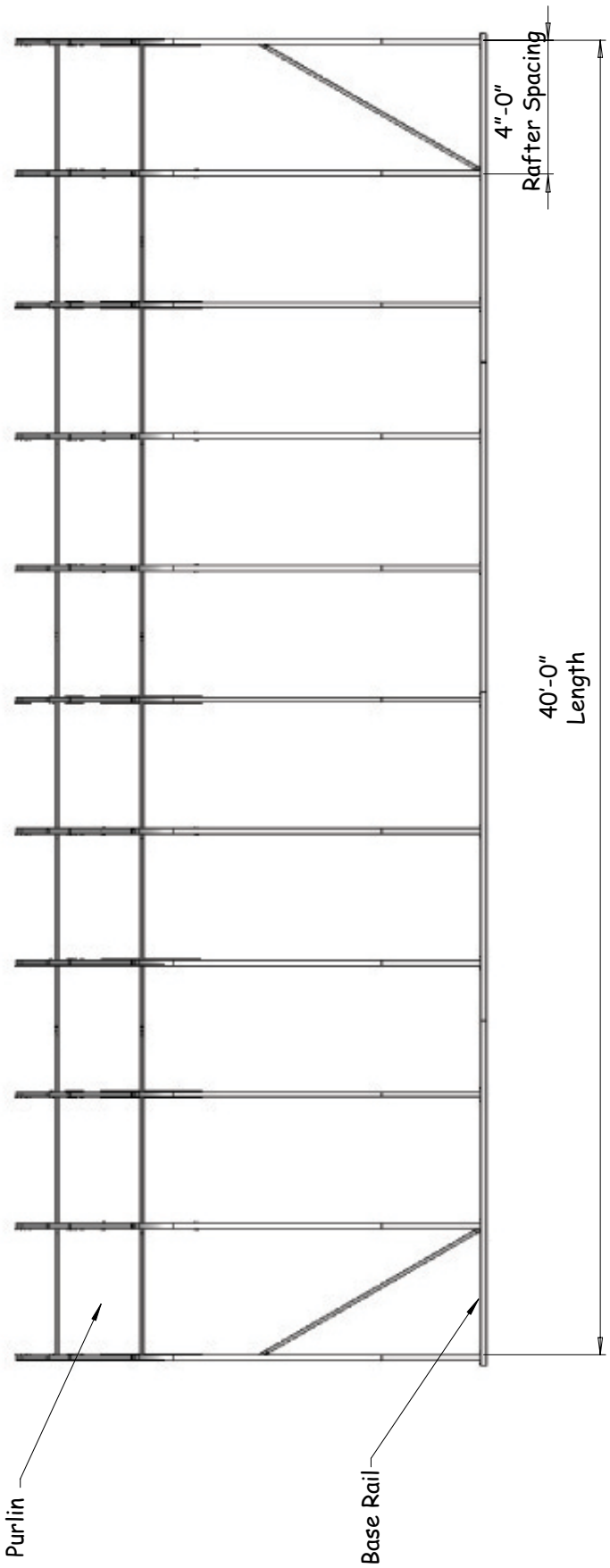

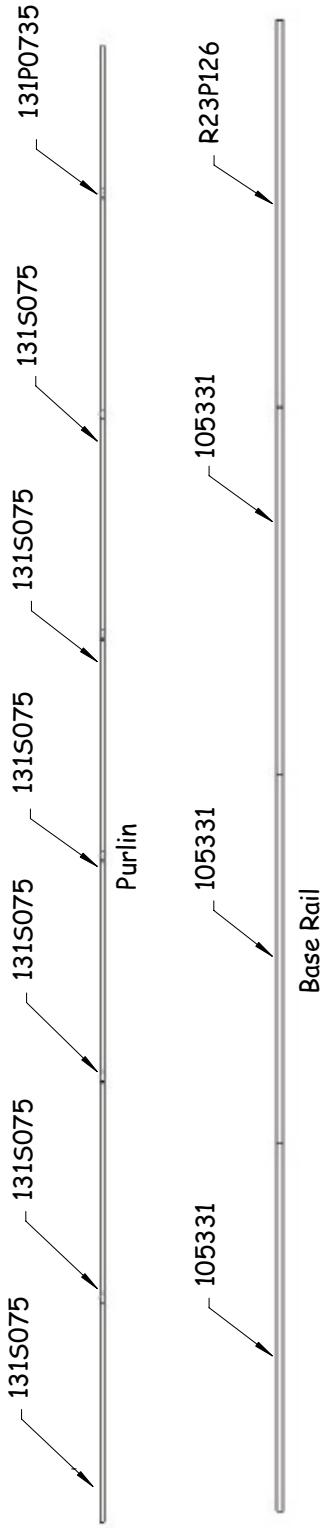

CONNECTIONS

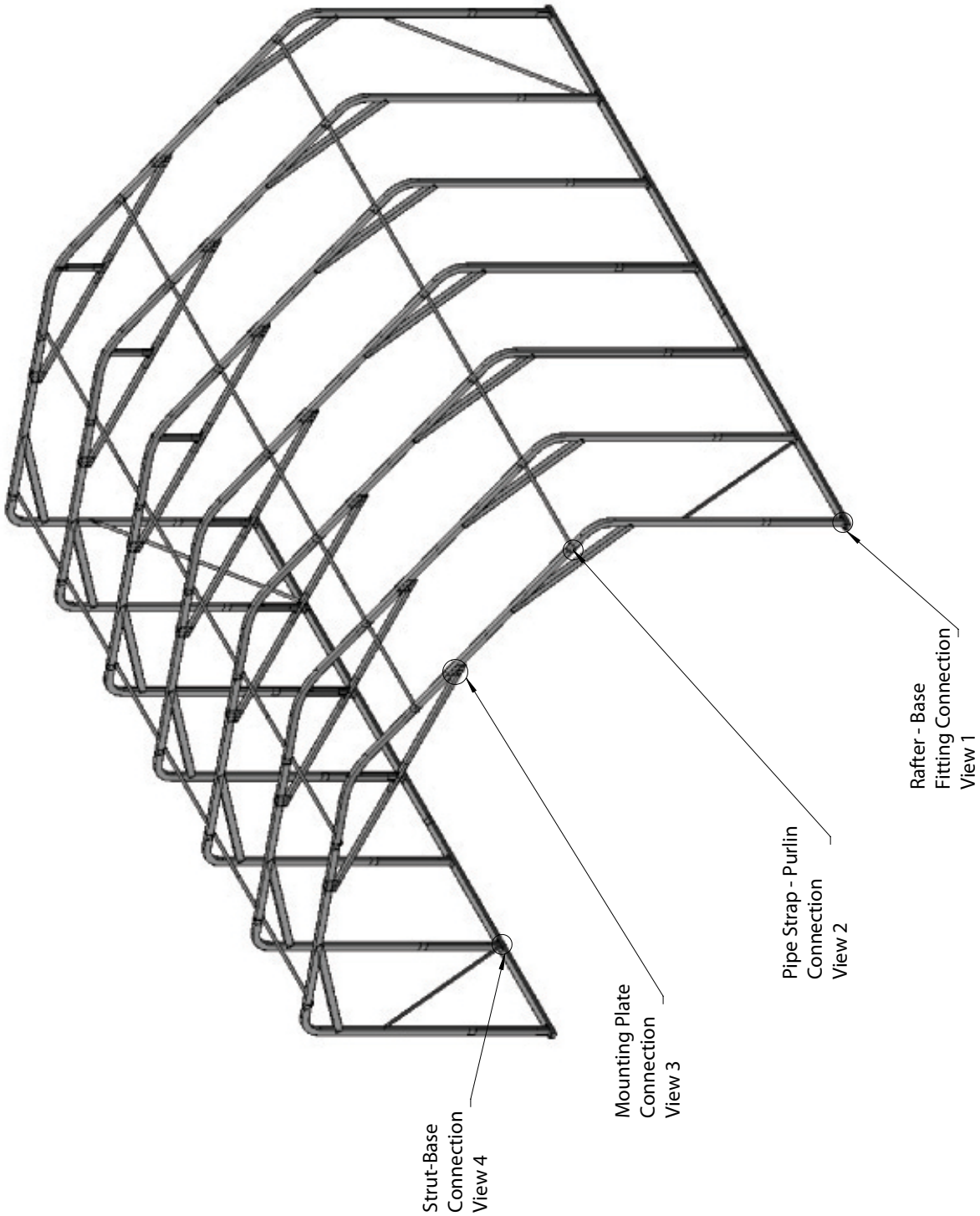

CONNECTION - DETAILS

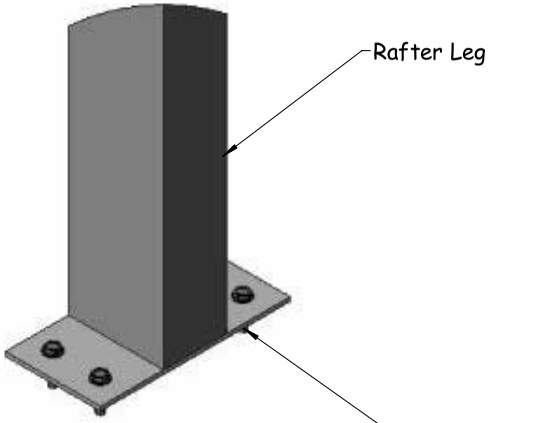

View 1
Rafter - Base
Fitting Connection

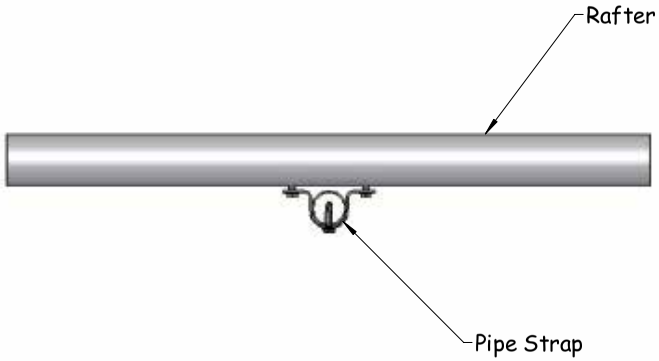

View 2
Pipe Strap - Purlin
Connection

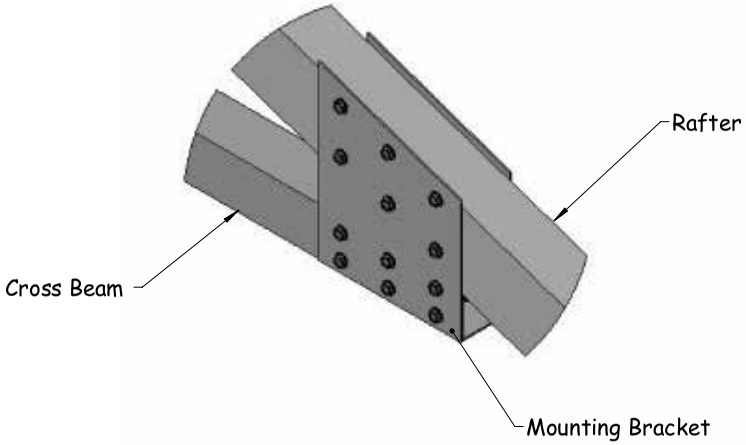

View 3
Mounting Bracket
Connection

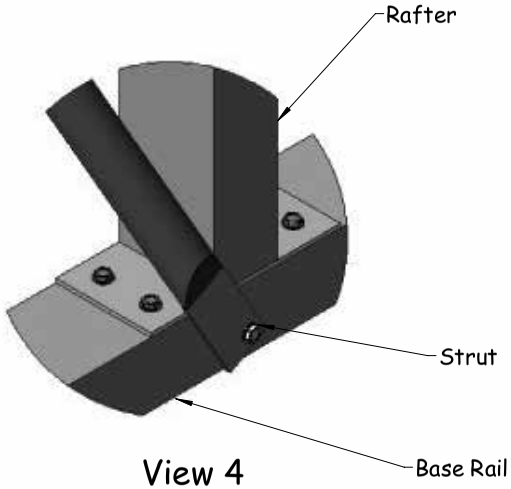

View 4
Strut - Base
Connection